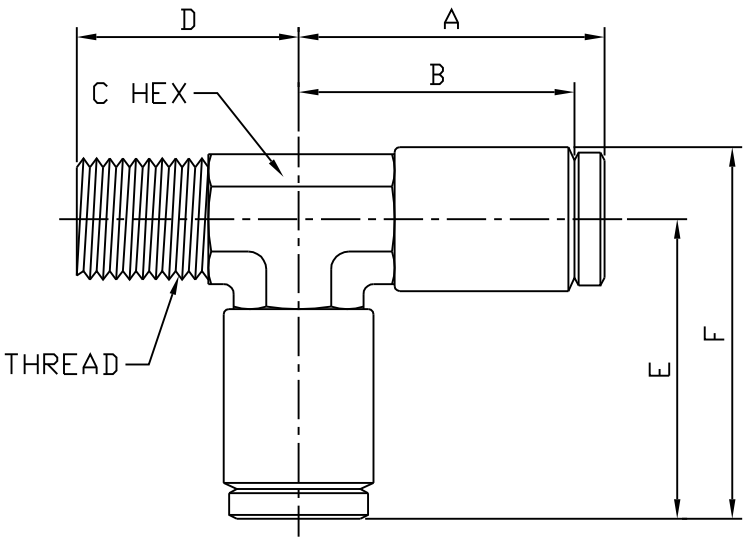

PART NUMBER	TUBE O.D.	PIPE THREAD	A	B	C	D	E	F
20095	1/8	1/8	0.73	0.65	5/16	0.72	0.65	0.94
20097	3/16	1/8	0.83	0.75	3/8	0.73	0.82	1.04
20098	1/4	1/8	1.00	0.92	3/8	0.74	0.92	1.24
20093	1/4	1/4	1.00	0.92	7/16	0.92	0.92	1.27
20099	3/8	1/8	1.02	0.94	1/2	0.82	0.94	1.34
20100	3/8	1/4	1.06	0.98	1/2	0.98	0.98	1.37
20101	3/8	3/8	1.13	1.05	5/8	1.05	1.05	1.49
20102	1/2	3/8	1.22	1.14	5/8	1.05	1.24	1.60

A

"This drawing contains proprietary and confidential information of Midland Metal Mfg., Co. and shall not be reproduced, copied, loaned, or submitted to outside parties for examination without our consent"

NO.	PCA	Date	Revision
4			
3			
2			
1			A

TOLERANCES ARE:
DECIMALS.
.X:± 0.03
.XX:± 0.01
.XXX:± 0.005
ANGLES:± 1°
FRACTIONS ± 1/8

Date:	01/30/04	UNIT:	INCH
Drawn:	Rita Sue	Scale:	
Checked:		PROJECT	
Approved:			

MIDLAND METAL MFG. CO.
KANSAS CITY,MO

Material:	CA377 BRASS
Part Title:	MALE RUN TEE
DWG. NO.	