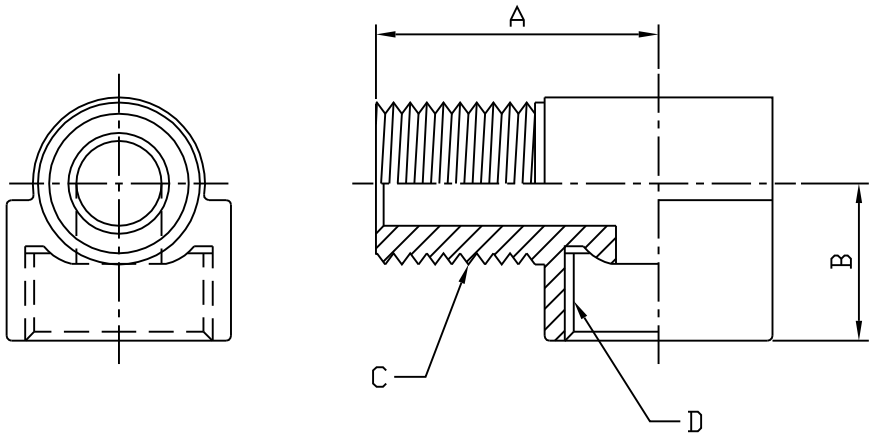


| PART NUMBER | A | B | C (NPTF) | D |
|---|---|---|---|---|
| 12057 | 0.59 | 0.26 | 1/8"-27 | 5/16"-24 |
| 12058 | 0.61 | 0.26 | 1/8"-27 | 3/8"-24 |
| 12059 | 0.65 | 0.33 | 1/8"-27 | 7/16"-24 |
| 12054* | 0.65 | 0.33 | 1/8"-27 | 7/16"-24 |
| 12060 | 0.82 | 0.28 | 1/4"-18 | 7/16"-24 |
| 12061 | 0.68 | 0.47 | 1/8"-27 | 1/2"-20 |
| 12062 | 0.85 | 0.45 | 1/4"-18 | 1/2"-20 |
| 12063 | 0.76 | 0.54 | 1/8"-27 | 5/8"-18 |
| 12064 | 0.92 | 0.53 | 1/4"-18 | 5/8"-18 |
| 12065 | 0.94 | 0.50 | 3/8"-18 | 5/8"-18 |
| 12066 | 1.03 | 0.59 | 3/8"-18 | 3/4"-18 |
| 12067 | 1.22 | 0.66 | 1/2"-14 | 3/4"-18 |
| 12056 | 1.09 | 0.67 | 3/8"-18 | 7/8"-18 |
| 12068 | 1.29 | 0.67 | 1/2"-14 | 7/8"-18 |
| 12069 | 1.39 | 0.80 | 1/2"-14 | 1-1/16"-16 |
| 12080 | 1.43 | 0.94 | 3/4"-14 | 1-3/16"-16 |
| 12081 | 1.69 | 1.02 | 1"-11-1/2 | 1-1/4"-16 |

* Restricted pipe end

**"This drawing contains proprietary and confidential information of Midland Metal Mfg., Co. and shall not be reproduced, copied, loaned, or submitted to outside parties for examination without our consent"**

| NO. | PCA | Date | Revision |
|---|---|---|---|
| 4 | | | |
| 3 | | | |
| 2 | | | |
| 1 | | | A |

TOLERANCES ARE:
DECIMALS.
.X:± 0.03
.XX:± 0.01
.XXX:± 0.005
ANGLES:± 1°
FRACTIONS ± 1/8

| | | | |
|---|---|---|---|
| Date: | 11/25/03 | UNIT: | INCH |
| Drawn: | Rita Sue | Scale: | |
| Checked: | | PROJECT | |
| Approved: | | | |

MIDLAND METAL MFG. CO.
KANSAS CITY,MO

| | |
|---|---|
| Material: | CA360 BRASS |
| Part Title: | FEMALE IN FL * MALE NPTF ELBOW |
| DWG. NO. | |