MIDLAND INDUSTRIES

PLUMBING & PVF

FITTINGS, NIPPLES AND VALVES

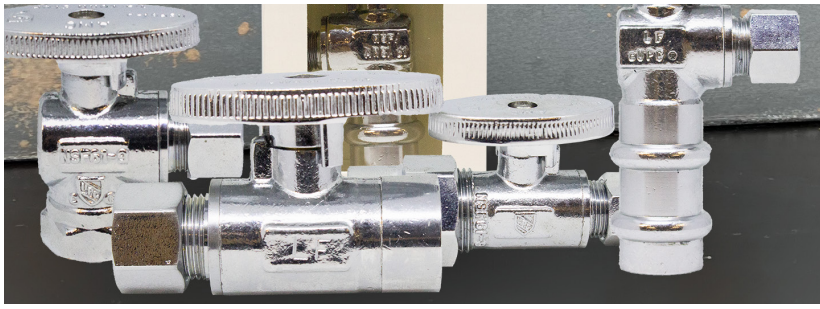

CALL US
PHONE: 800-821-5725

VISIT US
MIDLANDINDUSTRIES.COM

3145 OAK ST,
KANSAS CITY, MO 64111

FIND US ON:

ACCOUNT MANAGER

FULL CONTROL AT YOUR FINGER TIPS!

MUCH MORE THAN JUST PLACING ORDERS!

LOG INTO ACCOUNT MANAGER FOR:

- Get Account Information
- New Customer Profile
- Check Your Order History
- Access Your Invoices
- Download Current Pricing
- Print Bin Labels
- Check Backorders
- Print Invoices
- Pick A Preferred Warehouse
- Save Orders
- Manage Part Numbers
- Quick Order
- Upload Your Order
- And More...

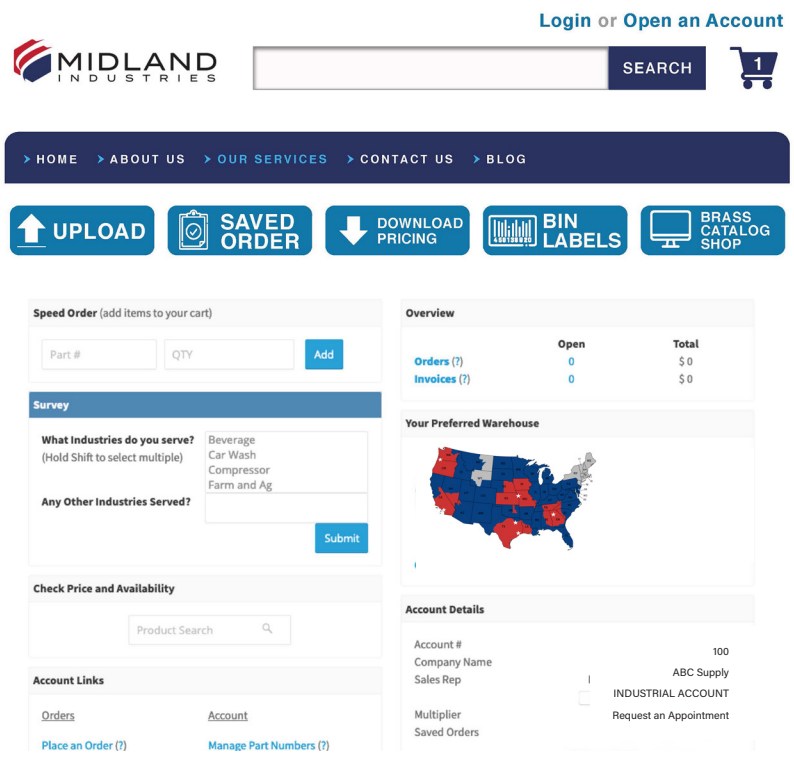

LOG IN TO MIDLANDINDUSTRIES.COM

VISIT WWW.MIDLANDINDUSTRIES.COM AND LOGIN TO YOUR ACCOUNT USING YOUR CUSTOMER ID AND PASSWORD.

- View your price and available stock.
- View open orders and tracking information on all shipments.
- Download pricing files.
- Update your Customer Profile and Contacts
- For Purchasing, Accounts Payable, Sales, and Marketing.
- Check your message center to see the latest updates and specials.

CUSTOMER ID # : _____

PASSWORD : _____

MULTIPLIER : _____

MIDLAND INDUSTRIES

PLUMBING & PVF

TABLE OF CONTENTS

New Products....4
Fittings and Nipples....6
Bronze Fittings....13
Lead Free Brass Fittings....13
Stainless Steel Nipples....24
Stainless Steel Fittings....30
Black And Galvanized Steel Nipples....38
Merchant Couplings....57
Malleable Fittings....59
Steel Fittings....69
Bull Plugs And Swages....72
Lead Free Valves....74
Lead Free....87
Plumbing Accessories....120
Valves....144
Sae 45° Flare....199

TO VIEW OUR FULL PRODUCT OFFERING OR DOWNLOAD OUR FULL CATALOG VISIT US AT **MIDLANDINDUSTRIES.COM**

CALL US
PHONE: 800-821-5725

VISIT US
MIDLANDINDUSTRIES.COM

3145 OAK ST,
KANSAS CITY, MO 64111

FIND US ON:

NEW PRODUCTS

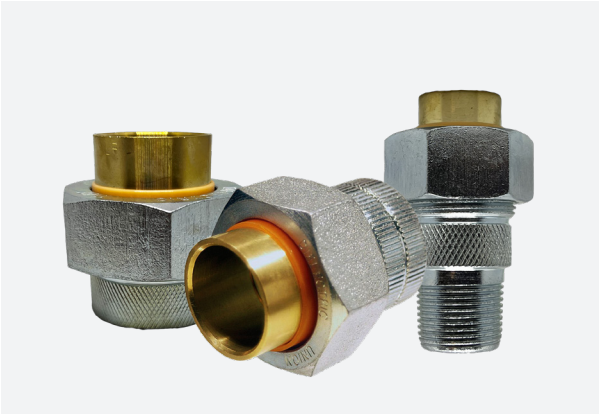

DIELECTRIC UNIONS

POWER CORDS

LF BRASS PEX FITTINGS

IRON BODY CLEANOUT PLUGS

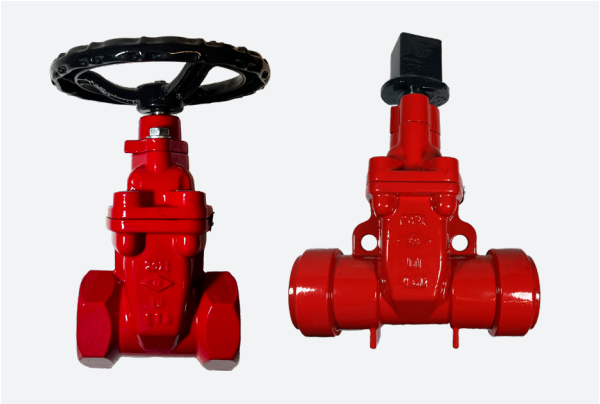

DUCTILE IRON GATE VALVES

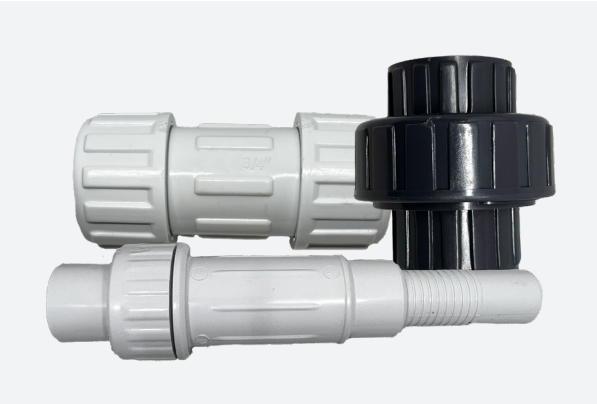

PVC PRODUCTS

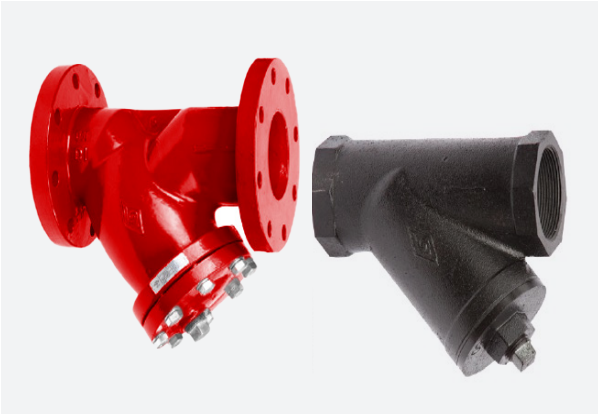

DI THREADED Y STRAINER

T-HANDLE BALL VALVE

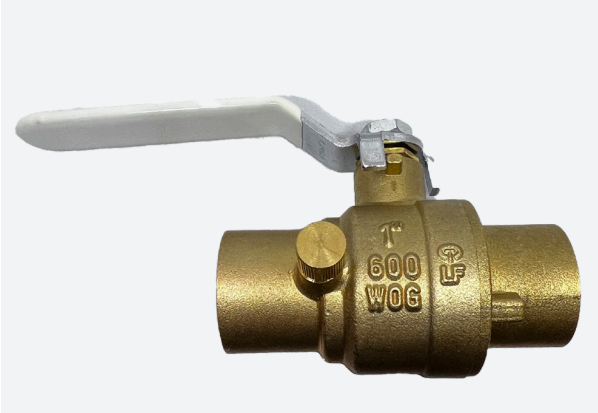

DRAINABLE BALL VALVE

VERTICAL POST INDICATORS

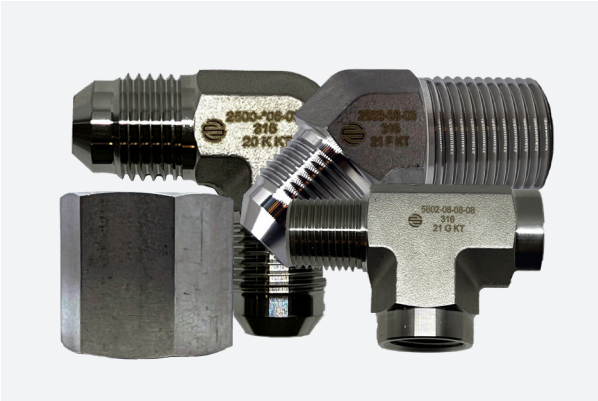

STAINLESS STEEL ADAPTERS

HOSE ASSEMBLIES

BRASS SCH 40 SEAMLESS

PLUMBING

113RB

LEAD FREE

1/8" - 27

1/8" DIAMETER SCH 40 SEAMLESS

PART #	LENGTH	BOX/CASE	APPROX. WT. LBS.	LIST
40001	Close (3/4")	25/400	0.02	---
40002	x 1-1/2"	25/400	0.03	---
40003	x 2"	25/400	0.04	---
40004	x 2-1/2"	25/400	0.05	---
40005	x 3"	25/400	0.06	---
40006	x 3-1/2"	25/400	0.07	---
40007	x 4"	25/400	0.08	---
40008	x 4-1/2"	25/400	0.10	---
40009	x 5"	25/400	0.11	---
40010	x 5-1/2"	25/400	0.12	---
40011	x 6"	25/400	0.13	---
40012	x 7"	25/400	0.15	---
40013	x 8"	25/400	0.17	---
40014	x 9"	25/400	0.19	---
40015	x 10"	25/400	0.21	---
40017	x 12"	25/400	0.25	---

LEAD FREE

1/4"-18

1/4" DIAMETER SCH 40 SEAMLESS

PART #	LENGTH	BOX/CASE	APPROX. WT. LBS.	LIST
40020	Close (7/8")	25/400	0.03	---
40021	x 1-1/2"	25/400	0.05	---
40022	x 2"	25/400	0.07	---
40023	x 2-1/2"	25/400	0.09	---
40024	x 3"	25/400	0.11	---
40025	x 3-1/2"	25/400	0.13	---
40026	x 4"	25/400	0.14	---
40027	x 4-1/2"	25/400	0.16	---
40028	x 5"	25/400	0.18	---
40029	x 5-1/2"	25/400	0.20	---
40030	x 6"	25/400	0.22	---
40031	x 7"	25/200	0.25	---
40032	x 8"	25/200	0.29	---
40034	x 10"	25/200	0.36	---
40035	x 11"	25/200	0.40	---
40036	x 12"	25/200	0.43	---

WARNING: This product can expose you to chemicals, including lead, which are known to the State of California to cause cancer and birth defects or other reproductive harm. For more information, visit www.P65Warnings.ca.gov

BRASS SCH 40 SEAMLESS
PLUMBING

LEAD FREE

3/8"-18

3/8" DIAMETER SCH 40 SEAMLESS

PART #	LENGTH	BOX/CASE	APPROX. WT. LBS.	LIST
40040	Close (1")	25/400	0.05	---
40041	x 1-1/2"	25/400	0.08	---
40042	x 2"	25/400	0.10	---
40043	x 2-1/2"	25/400	0.13	---
40044	x 3"	25/400	0.16	---
40045	x 3-1/2"	25/400	0.18	---
40046	x 4"	25/400	0.21	---
40047	x 4-1/2"	25/300	0.23	---
40048	x 5"	25/300	0.26	---
40049	x 5-1/2"	25/300	0.29	---
40050	x 6"	25/300	0.31	---
40051	x 7"	25/200	0.36	---
40052	x 8"	25/150	0.42	---
40054	x 10"	25/100	0.52	---
40056	x 12"	25/100	0.62	---

113RB

LEAD FREE

1/2" - 14

1/2" DIAMETER SCH 40 SEAMLESS

PART #	LENGTH	BOX/CASE	APPROX. WT. LBS.	LIST
40060	Close (1-1/8")	25/400	0.09	---
40061	x 1-1/2"	25/400	0.12	---
40062	x 2"	25/400	0.16	---
40063	x 2-1/2"	25/300	0.20	---
40064	x 3"	25/300	0.23	---
40065	x 3-1/2"	25/300	0.27	---
40066	x 4"	25/200	0.31	---
40067	x 4-1/2"	25/200	0.35	---
40068	x 5"	25/200	0.39	---
40069	x 5-1/2"	25/200	0.43	---
40070	x 6"	25/200	0.47	---
40071	x 7"	25/100	0.55	---
40072	x 8"	25/100	0.62	---
40073	x 9"	25/100	0.70	---
40074	x 10"	25/75	0.78	---
40075	x 11"	25/75	0.86	---
40076	x 12"	25/75	0.94	---
40079	x 24"			
40245	x 36"			

WARNING: This product can expose you to chemicals, including lead, which are known to the State of California to cause cancer and birth defects or other reproductive harm. For more information, visit www.P65Warnings.ca.gov

BRASS SCH 40 SEAMLESS

PLUMBING

LEAD FREE

3/4" - 14

3/4" DIAMETER SCH 40 SEAMLESS

PART #	LENGTH	BOX/CASE	APPROX. WT. LBS.	LIST
40080	Close (1- 3/8")	25/400	0.15	---
40081	x 1-1/2"	25/400	0.16	---
40082	x 2"	25/300	0.21	---
40083	x 2-1/2"	25/300	0.27	---
40084	x 3"	25/200	0.32	---
40085	x 3-1/2"	25/200	0.37	---
40086	x 4"	25/150	0.43	---
40087	x 4-1/2"	25/150	0.48	---
40088	x 5"	25/100	0.53	---
40089	x 5-1/2"	25/100	0.59	---
40090	x 6"	25/100	0.64	---
40091	x 7"	25/75	0.75	---
40092	x 8"	25/75	0.85	---
40093	x 9"	25/75	0.96	---
40094	x 10"	25/50	1.06	---
40095	x 11"	25/50	1.17	---
40096	x 12"	25/50	1.28	---
40097	x 18"	1/1	1.92	---
40098	x 24"	1/1	2.56	---
40099	x 36"	1/1	3.84	

113RB

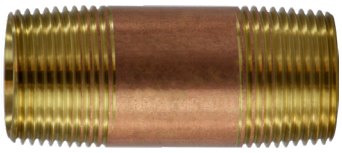

LEAD FREE

1" - 11 1/2

1" DIAMETER SCH 40 SEAMLESS

PART #	LENGTH	BOX/CASE	APPROX. WT. LBS.	LIST
40100	Close (1-1/2")	25/200	0.23	---
40101	x 2"	25/200	0.30	---
40102	x 2-1/2"	25/150	0.38	---
40103	x 3"	25/150	0.45	---
40104	x 3-1/2"	25/100	0.53	---
40105	x 4"	25/100	0.60	---
40106	x 4-1/2"	25/100	0.68	---
40107	x 5"	25/75	0.75	---
40108	x 5-1/2"	25/75	0.83	---
40109	x 6"	25/50	0.94	---
40110	x 7"	25/50	1.05	---
40111	x 8"	25/50	1.20	---
40112	x 9"	25/50	1.35	---
40113	x 10"	25/50	1.50	---
40114	x 11"	25/50	1.65	---
40115	x 12"	20/40	1.80	---
40118	x 18"			
40119	x 24"			
40262	x 36"			

WARNING: This product can expose you to chemicals, including lead, which are known to the State of California to cause cancer and birth defects or other reproductive harm. For more information, visit www.P65Warnings.ca.gov

BRASS SCH 40 SEAMLESS

PLUMBING

LEAD FREE

1 1/4" - 11 1/2

1-1/4" DIAMETER SCH 40 SEAMLESS

PART #	LENGTH	BOX/CASE	APPROX. WT. LBS.	LIST
40120	Close (1-5/8")	25/100	0.36	---
40121	x 2"	25/100	0.44	---
40122	x 2-1/2"	25/100	0.56	---
40123	x 3"	25/100	0.67	---
40124	x 3-1/2"	25/100	0.78	---
40125	x 4"	25/50	0.89	---
40126	x 4-1/2"	25/50	1.00	---
40127	x 5"	25/50	1.11	---
40128	x 5-1/2"	25/50	1.22	---
40129	x 6"	25/50	1.33	---
40131	x 8"	25/50	1.78	---
40135	x 12"	25/50	2.67	---

113RB

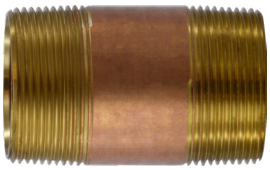

LEAD FREE

1-1/2" - 11 1/2

1-1/2" DIAMETER SCH 40 SEAMLESS

PART #	LENGTH	BOX/CASE	APPROX. WT. LBS.	LIST
40140	Close (1-3/4")	25/100	0.46	---
40141	x 2"	25/100	0.53	---
40142	x 2-1/2"	25/50	0.66	---
40143	x 3"	25/50	0.79	---
40144	x 3-1/2"	25/50	0.93	---
40145	x 4"	25/50	1.06	---
40146	x 4-1/2"	25/50	1.19	---
40147	x 5"	20/40	1.32	---
40148	x 5-1/2"	20/40	1.46	---
40149	x 6"	20/40	1.59	---
40151	x 8"	20/40	2.12	---
40153	x 10"	20/40	2.65	---
40155	x 12"	1/15	3.18	---

WARNING: This product can expose you to chemicals, including lead, which are known to the State of California to cause cancer and birth defects or other reproductive harm. For more information, visit www.P65Warnings.ca.gov

BRASS SCH 40 SEAMLESS

PLUMBING

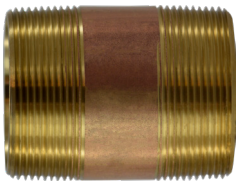

LEAD FREE

2" - 11 1/2

2" DIAMETER SCH 40 SEAMLESS

PART #	LENGTH	BOX/CASE	APPROX. WT. LBS.	LIST
40160	Close (2")	25/50	0.69	---
40161	x 2-1/2"	25/50	0.86	---
40162	x 3"	25/50	1.03	---
40163	x 3-1/2"	25/50	1.20	---
40164	x 4"	1/25	1.37	---
40165	x 4-1/2"	1/25	1.54	---
40166	x 5"	1/25	1.72	---
40167	x 5-1/2"	1/25	1.89	---
40168	x 6"	1/25	2.06	---
40169	x 7"	1/20	2.40	---
40170	x 8"	1/18	2.74	---
40171	x 9"	1/18	3.09	---
40172	x 10"	1/18	3.43	---
40174	x 12"	1/14	4.12	---
40175	x 18"	1/1	6.18	---
40176	x 24"	1/1	8.24	---
40177	x 30"			
40178	x 36"	1/1	12.36	---
40179	x 48"	1/1	16.48	---

113RB

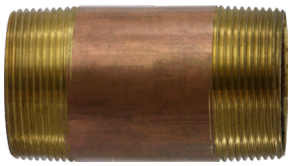

LEAD FREE

2 1/2" - 8

2-1/2" DIAMETER SCH 40 SEAMLESS

PART #	LENGTH	BOX/CASE	APPROX. WT. LBS.	LIST
40180	Close (2-1/2")	1/36	1.26	---
40181	x 3"	1/36	1.51	---
40182	x 3-1/2"	1/30	1.76	---
40183	x 4"	1/30	2.02	---
40184	x 4-1/2"	1/30	2.27	---
40185	x 5"	1/20	2.52	---
40186	x 5-1/2"	1/20	2.77	---
40187	x 6"	1/20	3.03	---
40193	x 12"			

See our Valve section for 2-1/2, 3 and 4" Valves

WARNING: This product can expose you to chemicals, including lead, which are known to the State of California to cause cancer and birth defects or other reproductive harm. For more information, visit www.P65Warnings.ca.gov

BRASS SCH 40 SEAMLESS

PLUMBING

LEAD FREE

3" DIAMETER SCH 40 SEAMLESS

PART #	LENGTH	BOX/CASE	APPROX. WT. LBS.	LIST
40200	Close (2-5/8")	1/24	1.89	---
40201	x 3"	1/20	2.16	---
40203	x 4"	1/18	2.88	---
40205	x 5"	1/18	3.60	---
40206	x 5-1/2"	1/18	3.96	---
40207	x 6"	1/12	4.32	---
40209	x 8"	1/1	5.76	---
40211	x 10"			
40213	x 12"	1/1		---

113RB

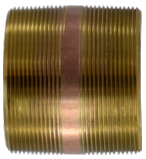

LEAD FREE

4" DIAMETER SCH 40 SEAMLESS

PART #	LENGTH	BOX/CASE	APPROX. WT. LBS.	LIST
40220	Close (2-7/8)	1/20	2.40	---
40234	x 6"	1/5	6.36	---

WARNING: This product can expose you to chemicals, including lead, which are known to the State of California to cause cancer and birth defects or other reproductive harm. For more information, visit www.P65Warnings.ca.gov

CHROME PLATED
PLUMBING

113CP

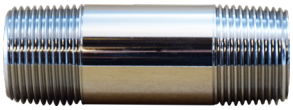

LEAD FREE

3/8" DIAMETER CHROME PLATED

PART #	LENGTH	BOX/CASE	APPROX. WT. LBS.	LIST
41040	X Close	5/25	0.05	---
41041	x 1-1/2"	5/25	0.08	---
41042	x 2"	5/25	0.10	---
41043	x 2-1/2"	5/25	0.13	---
41044	x 3"	5/25	0.16	---
41045	x 3-1/2"	5/25	0.18	---
41046	x 4"	5/25	0.21	---
41047	x 4-1/2"	5/25	0.23	---
41048	x 5"	5/25	0.26	---
41050	x 6"	5/25	0.31	---
41054	x 10"	1/1	0.52	

LEAD FREE

1/2" DIAMETER CHROME PLATED

PART #	LENGTH	BOX/CASE	APPROX. WT. LBS.	LIST
41060	X Close	5/25	0.09	---
41061	x 1-1/2"	5/25	0.12	---
41062	x 2"	5/25	0.16	---
41063	x 2-1/2"	5/25	0.20	---
41064	x 3"	5/25	0.23	---
41065	x 3-1/2"	5/25	0.27	---
41066	x 4"	5/25	0.31	---
41067	x 4-1/2"	5/25	0.35	---
41068	x 5"	5/25	0.39	---
41069	x 5-1/2"	5/25	0.43	---
41070	x 6"	5/25	0.47	---
41072	x 8"			
41074	x 10"	1/1	0.78	---
41076	x 12"	1/1	0.94	

WARNING: This product can expose you to chemicals, including lead, which are known to the State of California to cause cancer and birth defects or other reproductive harm. For more information, visit www.P65Warnings.ca.gov

BRONZE FITTINGS

UL842, UL258, UL125,FM

CLASS 125 (150) FOR STEAM, WATER, GAS, OIL AND AIR SERVICE

STANDARD SPECIFICATIONS

- UL/ FM Approved
- 1S0 9001:2000
- Not Lead Free
- RoHS Compliant

Materials - ASTM B62-93 (85,5,5,5) C83600
Dimensions - ANSI B 16.15
Threads - ANSI B2.1 or BA 21 and Fed. WW-P-460C, MSS-SP-106, ANSI/ASME B1.20.1
Bronze threaded fittings are manufactured from smooth-cored castings, designed to provide full flow with minimum restriction. All threads are accurately machined and gauged to ensure a perfect fit with the pipe. All fittings are individually tested under water to ensure quality. Bronze provides a tighter seal and is easier to install than other metals. Can be used for water, plumbing, heating, pneumatic and marine applications, able to resist the harmful effects of corrosion when coming into contact with salt water or fresh water polluted with mineral acids or peaty soils.

LEAD FREE BRASS FITTINGS

- Approved to ANSI/NSF 61-4 California AB 1953
- Meets Federal State Drinking Water Act, Lead Free Requirement
- Brass fittings conform to AWWA C800
- Brass castings conform to ASTM B584, UNS Alloy C8933
- Brass fittings dimensions conform to ASME B16.15
- NPT threads on all fittings conform to ASME B1.20.1
- Brass unions conform to specification A-A-59617
- Manufacturing facilities are ISO 9001:2008

WARNING: This product can expose you to chemicals, including lead, which are known to the State of California to cause cancer and birth defects or other reproductive harm. For more information, visit www.P65Warnings.ca.gov

BRONZE/ LEAD FREE BRONZE

PLUMBING

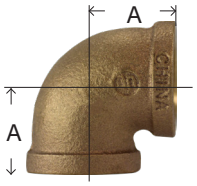

100RB

738100

LEAD FREE

90° ELBOWS

PART #	LIST	BOX/CASE	SIZE	PART #	LIST
44100	---	50/600	1/8″	44100LF	---
44101	---	35/420	1/4″	44101LF	---
44102	---	90/360	3/8″	44102LF	---
44103	---	50/200	1/2″	44103LF	---
44104	---	35/105	3/4″	44104LF	---
44105	---	20/60	1″	44105LF	---
44106	---	20/40	1-1/4″	44106LF	---
44107	---	15/30	1-1/2″	44107LF	---
44108	---	8/16	2″	44108LF	---
44109	---	1/12	2-1/2″	44109LF	
44110	---	1/4	3″	44110LF	---

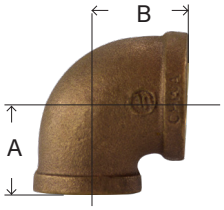

100RRB

738105

LEAD FREE

90° REDUCING ELBOWS

PART #	LIST	BOX/CASE	SIZE	PART #	LIST
44121			3/8 x 1/8	44121LF	---
	---		3/8 x 1/4	44122LF	
	---	60/240	1/2 x 1/4	44123LF	---
44124	---	60/240	1/2 x 3/8	44124LF	---
	---	40/160	3/4 x 1/4	44125LF	---
44127	---		3/4 x 1/2	44127LF	---
			1 x 1/2	44130LF	---
44131	---	50/100	1 x 3/4	44131LF	---
44134	---	25/50	1 1/4 x 1	44134LF	---
			1 1/2 x 1 1/4	44138LF	---
			2 x 1 1/2	44142LF	---
			2 1/2 x 2	44146LF	---

WARNING: This product can expose you to chemicals, including lead, which are known to the State of California to cause cancer and birth defects or other reproductive harm. For more information, visit www.P65Warnings.ca.gov

BRONZE/ LEAD FREE BRONZE

PLUMBING

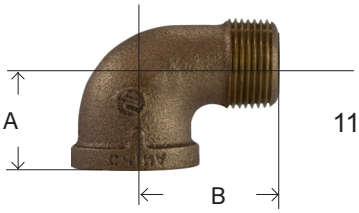

116RB

738116

LEAD FREE

90° STREET ELLS

PART #	LIST	BOX/CASE	SIZE	PART #	LIST
44160	---	60/720	1/8″	44160LF	---
44161	---	35/420	1/4″	44161LF	---
44162	---	60/240	3/8″	44162LF	---
44163	---	60/180	1/2″	44163LF	---
44164	---	35/105	3/4″	44164LF	---
44165	---	45/90	1″	44165LF	---
44166	---	25/50	1-1/4″	44166LF	---
44167	---	9/27	1-1/2″	44167LF	---
44168	---	8/16	2″	44168LF	---

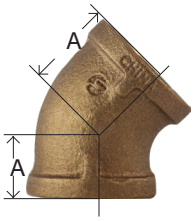

10045RB

738107

LEAD FREE

45° ELBOWS

PART #	LIST	BOX/CASE	SIZE	PART #	LIST
44180	---	50/600	1/8″	44180LF	---
44181	---	30/360	1/4″	44181LF	---
44182	---	75/300	3/8″	44182LF	---
44183	---	50/200	1/2″	44183LF	---
44184	---	40/120	3/4″	44184LF	---
44185	---	20/60	1″	44185LF	---
44186	---	20/40	1-1/4″	44186LF	---
44187	---	10/30	1-1/2″	44187LF	---
44188	---	12/24	2″	44188LF	---
44189	---	1/12	2-1/2"		---

DROP EAR ELBOWS

• LEAD FREE BRONZE • LEAD FREE BRASS

• LEAD FREE BRASS

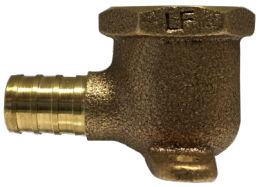

• LEAD FREE BRONZE

PART #	SWT X FIP	LIST PRICE
44840LF	1/2 x 1/2 Bronze	---
44841LF	1/2 x 1/2 Brass	---
44842LF	3/4 x 1/2 Brass	---
44843LF	3/4 x 3/4 Brass	---

PART #	SWT X SWT	LIST PRICE
44844LF	1/2 x 1/2	---

PART #	PEX X FIP	LIST PRICE
44845LF	1/2 x 1/2	---

WARNING: This product can expose you to chemicals, including lead, which are known to the State of California to cause cancer and birth defects or other reproductive harm. For more information, visit www.P65Warnings.ca.gov

BRONZE/ LEAD FREE BRONZE

PLUMBING

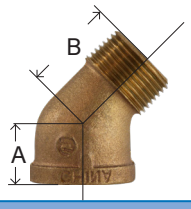

124RB

738124

LEAD FREE

45° STREET ELBOWS

PART #	LIST	BOX/CASE	SIZE	PART #	LIST
44200	---	70/840	1/8″	44200LF	
44201	---	100/400	1/4″	44201LF	---
44202	---	100/400	3/8″	44202LF	---
44203	---	75/225	1/2″	44203LF	---
44204	---	40/120	3/4″	44204LF	---
44205	---	25/75	1″	44205LF	---
44206	---	10/40	1-1/4″	44206LF	---
44207	---	10/30	1-1/2″	44207LF	---
44208	---	12/24	2″	44208LF	---

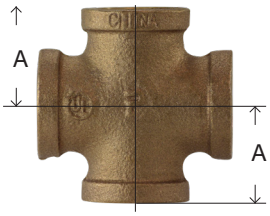

102RB

738102

LEAD FREE

CROSSES

PART #	LIST	BOX/CASE	SIZE	PART #	LIST
44391	---	60/240	1/4″	44391LF	---
44392	---	50/150	3/8″	44392LF	---
44393	---	30/90	1/2″	44393LF	---
44394	---	20/60	3/4″	44394LF	---
44395	---	15/30	1″	44395LF	---
44396	---	10/20	1-1/4″	44396LF	---
44397	---	8/16	1-1/2″	44397LF	---
44398	---	5/10	2″	44398LF	---
38102-32					

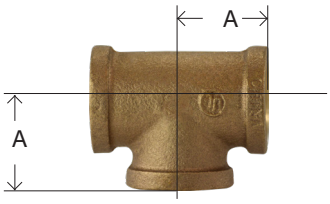

101RB

LEAD FREE

TEES

PART #	LIST	BOX/CASE	SIZE	PART #	LIST
44250	---	120/480	1/8″	44250LF	---
44251	---	75/300	1/4″	44251LF	---
44252	---	45/180	3/8″	44252LF	---
44253	---	40/120	1/2″	44253LF	---
44254	---	35/70	3/4″	44254LF	---
44255	---	20/40	1″	44255LF	---
44256	---	14/28	1-1/4″	44256LF	---
44257	---	12/24	1-1/2″	44257LF	---
44258	---	8/16	2″	44258LF	---
44259	---	1/6	2-1/2″	44259LF	---
44260	---	1/6	3″	44260LF	---
			4"	44261LF	---

WARNING: This product can expose you to chemicals, including lead, which are known to the State of California to cause cancer and birth defects or other reproductive harm. For more information, visit www.P65Warnings.ca.gov

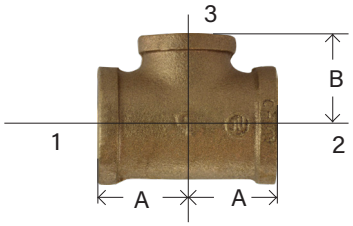

101RRB

738106

REDUCING TEES
REDUCING ON THE BRANCH

PART #	LIST	BOX/CASE	SIZE 1 X 2 X 3	PART #	LIST
			1/4 x 1/4 x 1/8	44270LF	---
44276	---	40/160	1/2 x 1/2 x 1/4	44276LF	---
			1/2 x 1/2 x 3/8	44279LF	---
	---	40/160	1/2 x 1/2 x 3/4	44280LF	---
44287	---		3/4 x 1/2 x 1/2	44287LF	---
44288			3/4 x 1/2 x 3/4	44288LF	---
44282	---	25/100	3/4 x 3/4 x 1/4	44282LF	---
	---	25/100	3/4 x 3/4 x 3/8	44283LF	
44286	---	20/80	3/4 x 3/4 x 1/2	44286LF	---
			1 x 1/2 x 1/2	44292LF	---
			1 x 1/2 x 3/4	44293LF	---
44296	---		1 x 3/4 x 3/4	44296LF	---
			1 x 1 x 1/4	44268LF	---
			1 x 1 x 3/8	44290LF	---
	---	15/60	1 x 1 x 1/2	44291LF	---
44298	---	12/48	1 x 1 x 3/4	44298LF	---
			1 1/4 x 1/2x1 x 1 1/4	44314LF	---
	---	20/40	1 1/4 x 1 1/4 x 1/2	44301LF	---
44303	---	20/40	1 1/4 x 1 1/4 x 3/4	44303LF	---
	---	20/40	1 1/4 x 1 1/4 x 1	44306LF	---
			1 1/2 x 1 1/2 x 1/2	44315LF	---
			1 1/2 x 1 1/2 x 3/4	44316LF	---
			1 1/2 x 1 1/2 x 1	44318LF	---
			1 1/2 x 1 1/2 x 1 1/4	44322LF	---
			2 x 2 x 1/2	44327LF	---
			2 x 2 x 3/4	44328LF	---
			2 x 2 x 1	44330LF	---
			2 x 2 x 1 1/2	44336LF	---
			3 x 3 x 2	44351LF	---

WARNING: This product can expose you to chemicals, including lead, which are known to the State of California to cause cancer and birth defects or other reproductive harm. For more information, visit www.P65Warnings.ca.gov

BRONZE/ LEAD FREE BRONZE
PLUMBING

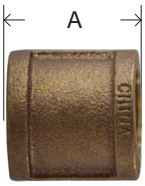

103RB

COUPLINGS

738103

LEAD FREE

PART #	LIST	BOX/CASE	SIZE	PART #	LIST
44410	---	70/840	1/8″	44410LF	---
44411	---	40/480	1/4″	44411LF	---
44412	---	40/480	3/8″	44412LF	---
44413	---	60/240	1/2″	44413LF	---
44414	---	50/150	3/4″	44414LF	---
44415	---	25/100	1″	44415LF	---
44416	---	16/64	1-1/4″	44416LF	---
44417	---	18/36	1-1/2″	44417LF	---
44418	---	12/24	2″	44418LF	---
44419	---	1	2-1/2"	44419LF	---
44420	---	1	3″	44420LF	
			4"	44421LF	---

119RB

REDUCING COUPLINGS

738119

LEAD FREE

PART #	LIST	BOX/CASE	SIZE	PART #	LIST
44430	---	70/840	1/4″ x 1/8″	44430LF	---
44431	---	35/420	3/8″ x 1/8″	44431LF	---
44432	---	30/360	3/8″ x 1/4″	44432LF	---
44433	---	75/300	1/2″ x 1/8″	44433LF	
44434	---	75/300	1/2″ x 1/4″	44434LF	---
44435	---	60/240	1/2″ x 3/8″	44435LF	---
44436	---	45/180	3/4″ x 1/4″	44436LF	---
44437	---	45/180	3/4″ x 3/8″	44437LF	---
44438	---	60/180	3/4″ x 1/2″	44438LF	---
44440	---	30/120	1″ x 3/8″	44440LF	
44441	---	30/120	1″ x 1/2″	44441LF	---
44442	---	25/100	1″ x 3/4″	44442LF	---
44445	---	25/75	1-1/4″ x 3/4″	44445LF	---
44446	---	15/60	1-1/4″ x 1″	44446LF	---
44447	---	20/60	1-1/2″ x 1/2″	44447LF	---
44448	---	15/60	1-1/2″ x 3/4″	44448LF	---
44449	---	25/50	1-1/2″ x 1″	44449LF	---
44450	---	12/48	1-1/2″ x 1-1/4″	44450LF	---
44451	---	12/36	2″ x 3/4″	44451LF	---
44452	---	12/36	2″ x 1″	44452LF	---
44453	---	9/27	2″ x 1-1/4″	44453LF	---
44454	---	9/27	2″ x 1-1/2″	44454LF	---
44462	---	1	2-1/2″ x 2″	44462LF	---
44456	---	1	3″ x 2″	44456LF	
		1	3″ x 2-1/2″	44463LF	

WARNING: This product can expose you to chemicals, including lead, which are known to the State of California to cause cancer and birth defects or other reproductive harm. For more information, visit www.P65Warnings.ca.gov

BRONZE/ LEAD FREE BRONZE
PLUMBING

108RB

738108

CAPS

PART #	LIST	BOX/CASE	SIZE	PART #	LIST
44470	---	80/160	1/8″	44470LF	---
44471	---	80/960	1/4″	44471LF	---
44472	---	60/720	3/8″	44472LF	---
44473	---	75/300	1/2″	44473LF	---
44474	---	40/160	3/4″	44474LF	---
44475	---	25/100	1″	44475LF	---
44476	---	20/80	1-1/4″	44476LF	---
44477	---	18/54	1-1/2″	44477LF	---
44478	---	12/36	2″	44478LF	---
	---		2-1/2"	44479LF	---
44480	---	1	3″	44480LF	---

104RB

738104

UNIONS

PART #	LIST	BOX/CASE	SIZE	PART #	LIST
44600	---	40/160	1/8″	44600LF	---
44601	---	40/160	1/4″	44601LF	---
44602	---	40/160	3/8″	44602LF	---
44603	---	50/100	1/2″	44603LF	---
44604	---	35/70	3/4″	44604LF	---
44605	---	20/40	1″	44605LF	---
44606	---	15/30	1-1/4″	44606LF	---
44607	---	10/20	1-1/2″	44607LF	---
44608	---	6/12	2″	44608LF	---
44609	---	4/8	2-1/2″	44609LF	---
44610	---	4/8	3″	44610LF	---

WARNING: This product can expose you to chemicals, including lead, which are known to the State of California to cause cancer and birth defects or other reproductive harm. For more information, visit www.P65Warnings.ca.gov

BRONZE/ LEAD FREE BRONZE

PLUMBING

HEX

110RB

738110

LEAD FREE

HEX BUSHINGS

PART #	LIST	BOX/CASE	SIZE	PART #	LIST
44500	---	120/1440	1/4″ x 1/8″	44500LF	---
44501	---	75/900	3/8″ x 1/8″	44501LF	---
44502	---	75/900	3/8″ x 1/4″	44502LF	---
44503	---	150/600	1/2″ x 1/8″	44503LF	---
44504	---	150/600	1/2″ x 1/4″	44504LF	---
44505	---	150/600	1/2″ x 3/8″	44505LF	---
44506	---	75/300	3/4″ x 1/8″	44506LF	---
44507	---	75/300	3/4″ x 1/4″	44507LF	---
44508	---	75/300	3/4″ x 3/8″	44508LF	---
44509	---	75/300	3/4″ x 1/2″	44509LF	---
44510*	---	50/200	1″ x 1/4″	44510LF*	---
44511*	---	50/200	1″ x 3/8″	44511LF	---
44512	---	50/200	1″ x 1/2″	44512LF	---
44513	---	50/200	1″ x 3/4″	44513LF	---
44515	---	30/120	1-1/4″ x 3/8″		---
44516*	---	30/120	1-1/4″ x 1/2″		---
44517	---	30/120	1-1/4″ x 3/4″	44517LF	---
44518	---	30/120	1-1/4″ x 1″	44518LF	---
44521*	---	25/75	1-1/2″ x 1/2″	44521LF*	---
44522*	---	25/75	1-1/2″ x 3/4″	44522LF*	---
44523	---	25/75	1-1/2″ x 1″	44523LF	---
44524	---	25/75	1-1/2″ x 1-1/4″	44524LF	---
44527*	---	20/60	2″ x 1/2″	44527LF	---
44528*	---	20/60	2″ x 3/4″	44528LF	---
44529*	---	20/60	2″ x 1″	44529LF*	---
44530	---	20/60	2″ x 1-1/4″	44530LF	---
44531	---	20/60	2″ x 1-1/2″	44531LF	---
44535	---	15/30	2-1/2″ x 2″	44535LF	---
44538	---	12/24	3″ x 2″	44538LF	---
44539	---	12/24	3″ x 2-1/2″	44539LF	---
44543	---	12/24	4" x 3"	44543LF	---

* INSIDE HEX

WARNING: This product can expose you to chemicals, including lead, which are known to the State of California to cause cancer and birth defects or other reproductive harm. For more information, visit www.P65Warnings.ca.gov

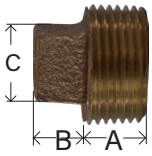

109RB 738109

CORED SQUARE HEAD PLUGS

PART #	LIST	BOX/CASE	SIZE	PART #	LIST
44650*	---	300/3600	1/8″	44650LF	---
44651*	---	150/1800	1/4″	44651LF	---
44652*	---	100/1200	3/8″	44652LF	---
44653	---	50/600	1/2″	44653LF	---
44654	---	30/360	3/4″	44654LF	---
44655	---	20/240	1″	44655LF	---
44656	---	40/120	1-1/4″	44656LF	---
44657	---	30/90	1-1/2″	44657LF	---
44658	---	20/60	2″	44658LF	---
44660	---	16/32	3″		---

* solid

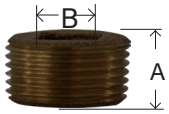

109ALRB

SQUARE DRIVE BRONZE COUNTERSUNK PLUGS

738115

PART #	LIST	SIZE	BOX/CASE	PART #	LIST
44633	---	1/2″	120/1440		
44634	---	3/4″	70/840	44634LF	---
44635	---	1″	20/240		---
44636	---	1-1/4″	40/120		---
44637	---	1-1/2″	30/90		---
44638	---	2″	20/60		---

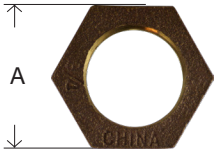

- STRAIGHT THREAD

111RB

HEX LOCKNUTS

PART #	LIST	BOX/CASE	SIZE
44701	---	90/540	1/4″
44703	---	90/360	1/2″
44704	---	90/360	3/4″
44705	---	50/150	1″

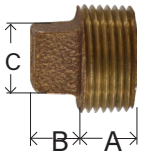

109SRB 738114

SOLID SQUARE HEAD PLUGS

PART #	LIST	SIZE	BOX/CASE	PART #	LIST
44670	---	1/8″	400/4800	44670LF	---
44671	---	1/4″	150/1800	44671LF	---
44672	---	3/8″	120/1440	44672LF	---
44673	---	1/2″	50/600	44673LF	---
44674	---	3/4″	35/420	44674LF	---
44675	---	1″	20/240	44675LF	---
44676	---	1-1/4″	30/120	44676LF	---
44677	---	1-1/2″	30/90	44677LF	---
44678	---	2″	10/60	44678LF	---
		4"			

WARNING: This product can expose you to chemicals, including lead, which are known to the State of California to cause cancer and birth defects or other reproductive harm. For more information, visit www.P65Warnings.ca.gov

BRONZE/ LEAD FREE BRONZE
PLUMBING

HEX NIPPLES

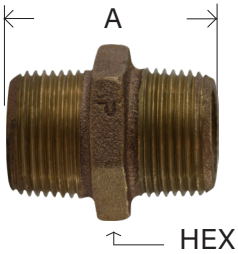

PART #	LIST	SIZE	BOX/CASE
44720	---	1/8″	400/4800
44721	---	1/4″	150/1800
44722		3/8"	120/1440
44723	---	1/2″	240/480
44724	---	3/4″	80/320
44725	---	1″	50/150
44726	---	1-1/4″	50/100
44727	---	1-1/2″	35/70
44728	---	2″	20/40

REDUCING HEX NIPPLES

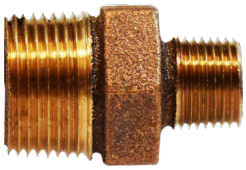

PART #	LIST	SIZE	BOX/CASE
44740	---	1/4" x 1/8"	1/1
44742	---	1/2" x 3/8"	1/1
44753	---	1-1/2" x 1-1/4"	1/1

FLANGE THREADED COMPANION LEAD-FREE

PART #	LIST	THREAD X OD	STD. PACK.	WT. PER 100
44791LF	---	3/4" x 3-7/8"	1	124
44792LF	---	1" x 4-1/4"	1	168
44794LF	---	1-1/2" x 5"	1	251
44795LF	---	2" x 6"	1	454
44796LF	---	2-1/2" x 7"	1	673
44797LF	---	3" x 7-1/2"	1	864
44798LF	---	4" x 9"	1	1227

WARNING: This product can expose you to chemicals, including lead, which are known to the State of California to cause cancer and birth defects or other reproductive harm. For more information, visit www.P65Warnings.ca.gov

CHROME PLATED BRONZE FITTINGS

PLUMBING

90° ELBOW

781100

PART #	SIZE	LIST
45102LF	3/8"	---
45103LF	1/2"	---
45104LF	3/4"	---
45105LF	1"	---

COUPLING

781103

PART #	SIZE	LIST
45412LF	3/8"	---
45413LF	1/2"	---

90° ELBOW

81100

PART #	SIZE	LIST
45102	3/8″	---
45103	1/2″	---
45104	3/4″	---
45105	1″	---

90° STREET ELLS

81116

PART #	SIZE	LIST
45162	3/8″	---
45163	1/2″	---
45164	3/4″	---
45165	1"	---

COUPLINGS

81103

PART #	SIZE	LIST
45412	3/8″	---
45413	1/2″	---
45414	3/4″	---
45435	1/2″ x 3/8″	---

CAPS

81108

PART #	SIZE	LIST
45473	1/2″	---

PLUGS

PART #	SIZE	LIST
45652	3/8″	---
45653	1/2″	---

WARNING: This product can expose you to chemicals, including lead, which are known to the State of California to cause cancer and birth defects or other reproductive harm. For more information, visit www.P65Warnings.ca.gov

STAINLESS STEEL NIPPLES

SCHEDULE 40 WELDED

Stainless steel pipe nipples are manufactured from stainless steel pipe that conforms to specification ASTM A312/ SA312.
All stainless steel nipples conform to specification ASTM A733. Threads conform to the requirements of ANSI B1.20.1.

304

The basic alloy. Type 304 (18-8) is an austenitic steel possessing a minimum of 18% chromium and 8% nickel, combined with a maximum of 0.08% carbon. It is a nonmagnetic steel which cannot be hardened by heat treatment, but instead. must be cold worked to obtain higher tensile strengths.

Because of its ability to withstand the corrosive action of various acids found in fruits, meats, milk, and vegetables,
Type 304 is especially suited for all types of dairy equipment piping and valves, the brewing industry, the citrus and fruit juice industry, and in food processing applications. Also used for the dye tanks, pipelines buckets, dippers, etc. that come in contact with the lormic, acetic, and other organic acids used in the dyeing industry.

In the marine environment, because of it slightly higher strength and wear resistance than type 316 it is also used for nuts, bolts, screws, and other fasteners. It is also used for springs, cogs, and other components where both wear and corrosion resistance is needed.

SCHEDULE 80 SEAMLESS

- See Www.midlandindustries.com
- Seamless For Unrestricted Flow
- Use With Air, Water, Oil, Natural Gas, Steam
- Fittings: Use Threaded Class 3000 High-Pressure Stainless Steel.
- ASTM A733
- ASTM A312
- ANSI/ ASME B1.20.1
- PSI 3000

316

For severe environments. Of course, there are many industrial processes that require a higher level of resistance to corrosion than Type 304 can offer. For these applications, Type 316 is the answer.

In type 316, the nickel content is increased slightly. What distinguishes Type 316 from Type 304 is the addition of molybdenum up to a maximum of 3%.

Molybdenum increases the corrosion resistance of this chromium-nickel alloy to withstand attack by many industrial chemicals and solvents, and, in particular, inhibits pitting caused by chlorides. As such, molybdenum is one of the single most useful alloying additives in the fight against corrosion.

Type 316 can withstand corrosive attack by sodium and calcium brines, hypochlorite solutions, phosphoric acid; and the sulfite liquors and sulfurous acids used in the paper pulp industry. This alloy, therefore, is specified for industrial equipment that handles the corrosive process chemicals used to produce inks, rayons, photographic chemicals, paper, textiles, bleaches, and rubber. Type 316 is also used extensively for surgical implants within the hostile environment of the body.

Type 316 is the main stainless used in the marine environment, with the exception of fasteners and other items where strength and wear resistance are needed, then Type 304 (18-8) is typically used.

WARNING: This product can expose you to chemicals, including lead, which are known to the State of California to cause cancer and birth defects or other reproductive harm. For more information, visit www.P65Warnings.ca.gov

SCH 40 STAINLESS STEEL NIPPLES

PLUMBING

#304

1/8" - 27

#316

1/8" DIAMETER SCH 40 WELDED

PART # 304 S.S.	LIST PRICE	LENGTH	BOX	APPROX. WT. LBS.	PART # 316 S.S.	LIST PRICE
48001	---	X Close (3/4")	25	0.01	49001	---
48002	---	x 1-1/2"	25	0.03	49002	---
48003	---	x 2"	25	0.04	49003	---
48004	---	x 2-1/2"	25	0.05	49004	---
48005	---	x 3"	25	0.06	49005	---
48006	---	x 3-1/2"	25	0.07	49006	---
48007	---	x 4"	25	0.07	49007	---
48008	---	x 4-1/2"	25	0.09	49008	---
48009	---	x 5"	25	0.10	49009	---
48010	---	x 5-1/2"	25	0.11	49010	---
48011	---	x 6"	25	0.12	49011	---
48015	---	x 10"	1	0.19		
		x 12"	1	0.24	49017	---

1/4"-18

1/4" DIAMETER SCH 40 WELDED

PART # 304 S.S.	LIST PRICE	LENGTH	BOX	APPROX. WT. LBS.	PART # 316 S.S.	LIST PRICE
48020	---	X Close (7/8")	25	0.02	49020	---
48021	---	x 1-1/2"	25	0.04	49021	---
48022	---	x 2"	25	0.06	49022	---
48023	---	x 2-1/2"	25	0.07	49023	---
48024	---	x 3"	25	0.09	49024	---
48025	---	x 3-1/2"	25	0.11	49025	---
48026	---	x 4"	25	0.13	49026	---
48027	---	x 4-1/2"	25	0.14	49027	---
48028	---	x 5"	25	0.16	49028	---
48029	---	x 5-1/2"	25	0.18	49029	---
48030	---	x 6"	25	0.19	49030	---
48032	---	x 8"	1	0.25	49032	---
		x 9"	1	0.31	49033	---
48034	---	x 10"	1	0.35	49034	---
		x 11"	1	0.40	49035	---
48036	---	x 12"	1	0.44	49036	---

WARNING: This product can expose you to chemicals, including lead, which are known to the State of California to cause cancer and birth defects or other reproductive harm. For more information, visit www.P65Warnings.ca.gov

SCH 40 STAINLESS STEEL NIPPLES

PLUMBING

#304

3/8"-18

3/8" DIAMETER
SCH 40 WELDED

#316

PART # 304 S.S.	LIST PRICE	LENGTH	BOX	APPROX. WT. LBS.	PART # 316 S.S.	LIST PRICE
48040	---	X Close (1")	25	0.03	49040	---
48041	---	x 1-1/2"	25	0.06	49041	---
48042	---	x 2"	25	0.07	49042	---
48043	---	x 2-1/2"	25	0.10	49043	---
48044	---	x 3"	25	0.12	49044	---
48045	---	x 3-1/2"	25	0.15	49045	---
48046	---	x 4"	25	0.17	49046	---
48047	---	x 4-1/2"	25	0.19	49047	---
48048	---	x 5"	25	0.22	49048	---
48049	---	x 5-1/2"	25	0.23	49049	---
48050	---	x 6"	25	0.26	49050	---

1/2" - 14

1/2" DIAMETER
SCH 40 WELDED

PART # 304 S.S.	LIST PRICE	LENGTH	BOX	APPROX. WT. LBS.	PART # 316 S.S.	LIST PRICE
48060	---	X Close 1-1/8"	25	0.05	49060	---
48061	---	x 1-1/2"	25	0.07	49061	---
48062	---	x 2"	25	0.10	49062	---
48063	---	x 2-1/2"	25	0.14	49063	---
48064	---	x 3"	25	0.18	49064	---
48065	---	x 3-1/2"	25	0.20	49065	---
48066	---	x 4"	25	0.25	49066	---
48067	---	x 4-1/2"	25	0.28	49067	---
48068	---	x 5"	25	0.31	49068	---
48069	---	x 5-1/2"	25	0.34	49069	---
48070	---	x 6"	25	0.39	49070	---
48071	---	x 7"	1	0.41		
48072	---	x 8"	1	0.52		---
48073	---	x 9"	1	0.54		
48074	---	10"	1	0.58		---
48075	---	x 11"	1	0.64		
48076	---	x 12"	1	0.69	49076	

WARNING: This product can expose you to chemicals, including lead, which are known to the State of California to cause cancer and birth defects or other reproductive harm. For more information, visit www.P65Warnings.ca.gov

SCH 40 STAINLESS STEEL NIPPLES

PLUMBING

#304

3/4" - 14

#316

3/4" DIAMETER SCH 40 WELDED

PART # 304 S.S.	LIST PRICE	LENGTH	BOX	APPROX. WT. LBS.	PART # 316 S.S.	LIST PRICE
48080	---	X Close (1-3/8")	25	0.08	49080	---
48081	---	x 1-1/2"	25	0.13	49081	---
48082	---	x 2"	25	0.14	49082	---
48083	---	x 2-1/2"	25	0.17	49083	---
48084	---	x 3"	25	0.22	49084	---
48085	---	x 3-1/2"	25	0.27	49085	---
48086	---	x 4"	25	0.32	49086	---
48087	---	x 4-1/2"	25	0.38	49087	---
48088	---	x 5"	25	0.40	49088	---
48089	---	x 5-1/2"	25	0.42	49089	---
48090	---	x 6"	25	0.48	49090	---
	---	x 7"	1	0.45	49091	
48092	---	x 8"	1	0.67	49092	---
48094	---	x 10"	1	0.94	49094	---
48096	---	x 12"	1	1.03	49096	

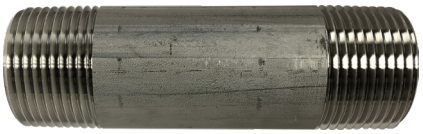

1" - 11 1/2

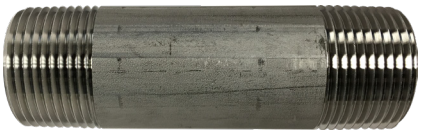

1" DIAMETER SCH 40 WELDED

PART # 304 S.S.	LIST PRICE	LENGTH	BOX	APPROX. WT. LBS.	PART # 316 S.S.	LIST PRICE
48100	---	X Close (1-1/2")	25	0.13	49100	---
48101	---	x 2"	25	0.20	49101	---
48102	---	x 2-1/2"	25	0.25	49102	---
48103	---	x 3"	25	0.33	49103	---
48104	---	x 3-1/2"	25	0.40	49104	---
48105	---	x 4"	25	0.47	49105	---
48106	---	x 4-1/2"	25	0.53	49106	---
48107	---	x 5"	25	0.55	49107	---
48108	---	x 5-1/2"	25	0.60	49108	---
48109	---	x 6"	25	0.71	49109	---
48110	---	x 7"	1	0.57		---
48111	---	x 8"	1	1.02	49111	---
48113	---	x 10"	1	1.16	49113	---
48115	---	x 12"	1	1.31	49115	

WARNING: This product can expose you to chemicals, including lead, which are known to the State of California to cause cancer and birth defects or other reproductive harm. For more information, visit www.P65Warnings.ca.gov

SCH 40 STAINLESS STEEL NIPPLES

PLUMBING

1 1/4" - 11 1/2

1-1/4" DIAMETER SCH 40 WELDED

PART # 304 S.S.	LIST PRICE	LENGTH	BOX	APPROX. WT. LBS.	PART # 316 S.S.	LIST PRICE
48120	---	X Close (1-5/8")	10	0.17	49120	---
48121	---	x 2"	10	0.23	49121	---
48122	---	x 2-1/2"	10	0.35	49122	---
48123	---	x 3"	10	0.46	49123	---
48124	---	x 3-1/2"	10	0.52	49124	---
48125	---	x 4"	10	0.65	49125	---
48126	---	x 4-1/2"	10	0.53	49126	---
48127	---	x 5"	10	0.60	49127	---
48128	---	x 5-1/2"	10	0.61	49128	---
48129	---	x 6"	10	0.71	49129	---
48131	---	x 8"	1	1.34		
48135	---	x 12"	1	1.54		

1-1/2" - 11 1/2

1-1/2" DIAMETER SCH 40 WELDED

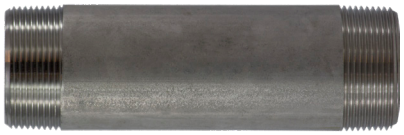

PART # 304 S.S.	LIST PRICE	LENGTH	BOX	APPROX. WT. LBS.	PART # 316 S.S.	LIST PRICE
48140	---	X Close x 1-3/4"	10	0.25	49140	---
48141	---	x 2"	10	0.32	49141	---
48142	---	x 2-1/2"	10	0.41	49142	---
48143	---	x 3"	10	0.52	49143	---
48144	---	x 3-1/2"	10	0.62	49144	---
48145	---	x 4"	10	0.73	49145	---
48146	---	x 4-1/2"	10	0.86	49146	---
48147	---	x 5"	10	0.95	49147	---
48148	---	x 5-1/2"	10	1.01	49148	---
48149	---	x 6"	10	1.19	49149	---
48151	---	x 8"	1	1.63		---
48152	---	x 9"	1	1.88		
48153	---	x 10"	1	2.28		---
48155	---	x 12"	1	2.43		

WARNING: This product can expose you to chemicals, including lead, which are known to the State of California to cause cancer and birth defects or other reproductive harm. For more information, visit www.P65Warnings.ca.gov

SCH 40 STAINLESS STEEL NIPPLES

PLUMBING

2" DIAMETER SCH 40 WELDED

PART # 304 S.S.	LIST PRICE	LENGTH	BOX	APPROX. WT. LBS.	PART # 316 S.S.	LIST PRICE
48160	---	X Close (2")	10	0.37	49160	---
48161	---	x 2-1/2"	10	0.54	49161	---
48162	---	x 3"	10	0.65	49162	---
48163	---	x 3-1/2"	10	0.88	49163	---
48164	---	x 4"	10	1.02	49164	---
48165	---	x 4-1/2"	10	1.16	49165	---
48166	---	x 5"	10	1.29	49166	---
48167	---	x 5-1/2"	10	1.46	49167	---
48168	---	x 6"	10	1.57	49168	---
48170	---	x 8"	1	2.01	49170	---
48172	---	x 10"	1	2.69		
48174	---	x 12"	1	2.89	49174	

2-1/2" DIAMETER SCH 40 WELDED

PART # 304 S.S.	LENGTH	BOX	APPROX. WT. LBS.	LIST PRICE
48180	X Close (2-1/2")	10	0.64	---
48187	x 6"	1	2.37	---

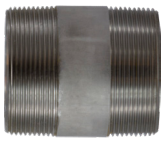

3" DIAMETER SCH 40 WELDED

PART # 304 S.S.	LIST PRICE	LENGTH	BOX	APPROX. WT. LBS.	PART # 316 S.S.	LIST PRICE
48200	---	X Close (2-5/8")	10	0.95	49200	---
48201	---	x 3"	10	1.32	49201	---
48203	---	x 4"	10	1.66	49203	---
48205	---	x 5"	5	1.72		---
48207	---	x 6"	5	1.88	49207	---
48213	---	x 12"	1	2.12	49213	---

4" DIAMETER SCH 40 WELDED

PART # 304 S.S.	LIST PRICE	LENGTH	BOX	APPROX. WT. LBS.	PART # 316 S.S.	LIST PRICE
48220	---	X Close (2-7/8")	8	1.15	49220	---
48223		x 4"	1	2.98	49223	---
48227	---	x 6"	1	4.10	49234	---
48229		x 8"	1	5.95	49236	---

WARNING: This product can expose you to chemicals, including lead, which are known to the State of California to cause cancer and birth defects or other reproductive harm. For more information, visit www.P65Warnings.ca.gov

STAINLESS STEEL FITTINGS

150# 304 & 316 Stainless Steel Fittings

Our high quality standard pattern 150lb rated stainless steel threaded fittings are manufactured to the highest standards. All stainless steel fittings are monitored by our quality control personnel for strict compliance with applicable standards and specifications.

These stainless steel pipe fittings are excellent for uses that involve chemicals or liquids that may be corrosive. Along with fighting corrosion, a stainless steel pipe fitting will prevent contamination making it useful to many professionals.

- Use with air, water, oil, natural gas, steam
- NPT and FNPT threads conform to ASME B1.20.1
- Maximum Pressure: 300 psi @ 72 F;150 psi @ 366 F for steam
- Maximum Steam Pressure: 150 psi
- Material Conforms to ASTM A-351. Class 150 Pressure Ratings
- Manufacturing facility is ISO 9001:2008
- 304 Stainless Steel is economically priced, chromium-nickel material that offers very good corrosion resistance. 316 Stainless Steel has higher nickel content and contains molybdenum for even better corrosion resistance.

WARNING: This product can expose you to chemicals, including lead, which are known to the State of California to cause cancer and birth defects or other reproductive harm. For more information, visit www.P65Warnings.ca.gov

304 AND 316 150# SS FITTINGS

PLUMBING

90° ELBOW
304 & 316 150#

PART # 304 S.S	LIST PRICE	SIZE	BOX	APPROX. WT. LBS.	PART # 316 S.S.	LIST PRICE
62100	---	1/8″	25	0.06	63100	---
62101	---	1/4″	25	0.06	63101	---
62102	---	3/8″	25	0.11	63102	---
62103	---	1/2″	25	0.13	63103	---
62104	---	3/4″	25	0.20	63104	---
62105	---	1″	10	0.33	63105	---
62106	---	1-1/4″	10	0.55	63106	---
62107	---	1-1/2″	5	0.77	63107	---
62108	---	2″	5	1.10	63108	---
62109	---	2-1/2″	1	2.09		
62110	---	3″	1	2.84	63110	---
62112	---	4″	1	5.00	63112	---

90° STREET ELBOW
304 & 316 150#

PART # 304 S.S	LIST PRICE	SIZE	BOX	APPROX. WT. LBS.	PART # 316 S.S.	LIST PRICE
62160	---	1/8″	25	0.04	63160	---
62161	---	1/4″	25	0.07	63161	---
62162	---	3/8″	25	0.09	63162	---
62163	---	1/2″	25	0.15	63163	---
62164	---	3/4″	25	0.24	63164	---
62165	---	1″	10	0.31	63165	---
62166	---	1-1/4″	10	0.51	63166	---
62167	---	1-1/2″	5	0.84	63167	---
62168	---	2″	5	1.26	63168	---
62169	---	3"	1	4.16	63170	---

45° ELBOW
304 & 316 150#

PART # 304 S.S	LIST PRICE	SIZE	BOX	APPROX. WT. LBS.	PART # 316 S.S.	LIST PRICE
62180	---	1/8″	25	0.04	63180	---
62181	---	1/4″	25	0.07	63181	---
62182	---	3/8″	25	0.09	63182	---
62183	---	1/2″	25	0.13	63183	---
62184	---	3/4″	25	0.20	63184	---
62185	---	1″	10	0.33	63185	---
62186	---	1-1/4″	10	0.49	63186	---
62187	---	1-1/2″	5	0.66	63187	---
62188	---	2″	5	1.14	63188	---
62189	---	2-1/2"	1	2.82		
62190	---	3"	1	2.91	63190	---
62191	---	4"	1	5.05	63192	---

WARNING: This product can expose you to chemicals, including lead, which are known to the State of California to cause cancer and birth defects or other reproductive harm. For more information, visit www.P65Warnings.ca.gov

304 AND 316 150# SS FITTINGS

PLUMBING

TEE
304 & 316 150#

PART # 304 S.S	LIST PRICE	SIZE	BOX	APPROX. WT. LBS.	PART # 316 S.S.	LIST PRICE
62250	---	1/8″	25	0.07	63250	---
62251	---	1/4″	25	0.07	63251	---
62252	---	3/8″	25	0.11	63252	---
62253	---	1/2″	25	0.20	63253	---
62254	---	3/4″	25	0.29	63254	---
62255	---	1″	10	0.42	63255	---
62256	---	1-1/4″	5	0.66	63256	---
62257	---	1-1/2″	5	0.99	63257	---
62258	---	2″	3	1.43	63258	---
62259	---	2-1/2"	1	1.43		
62260	---	3″	1	3.66	63260	---
62261		4"	1	7.19	63261	---

CROSS
304 & 316 150#

PART # 304 S.S	LIST PRICE	SIZE	BOX	APPROX. WT. LBS.	PART # 316 S.S.	LIST PRICE
		1/8″	25	0.06	63390	---
62391	---	1/4″	25	0.09	63391	---
62392	---	3/8″	25	0.13	63392	---
62393	---	1/2″	25	0.29	63393	---
62394	---	3/4″	10	0.44	63394	---
62395	---	1″	10	0.74	63395	---
62396	---	1-1/4″	5	1.25		---
62397	---	1-1/2″	5	1.53		---
62398	---	2″	1	2.28		---

HEX NIPPLE
304 & 316 150#

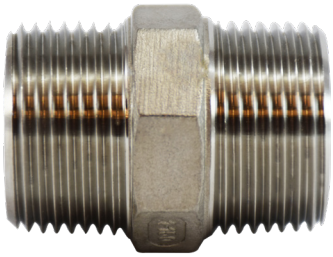

PART # 304 S.S	LIST PRICE	SIZE	BOX	APPROX. WT. LBS.	PART # 316 S.S.	LIST PRICE
62720	---	1/8″	1	0.02	63720	---
62721	---	1/4″	1	0.04	63721	---
62722	---	3/8″	1	0.07	63722	---
62723	---	1/2″	1	0.11	63723	---
62724	---	3/4″	1	0.18	63724	---
62725	---	1″	1	0.22	63725	---
62726	---	1-1/4″	1	0.37	63726	---
62727	---	1-1/2″	1	0.46	63727	---
62728	---	2″	1	0.61	63728	---

REDUCING HEX NIPPLE
304 & 316 150#

PART # 304 S.S	LIST PRICE	SIZE	BOX	APPROX. WT. LBS.	PART # 316 S.S.	LIST PRICE
62740	---	1/4" x 1/8"	1	0.04	63740	---
62741	---	3/8" x 1/8"	1	0.07		---
62742	---	3/8" x 1/4"	1	0.07	63742	---
62744	---	1/2" x 1/4"	1	0.09	63744	---
62745	---	1/2" x 3/8"	1	0.11	63745	---
62748	---	3/4" x 3/8"	1	0.15	63748	---
62749	---	3/4" x 1/2"	1	0.15	63749	---

WARNING: This product can expose you to chemicals, including lead, which are known to the State of California to cause cancer and birth defects or other reproductive harm. For more information, visit www.P65Warnings.ca.gov

304 AND 316 150# SS FITTINGS

PLUMBING

COUPLING 304 & 316 150#

PART # 304 S.S	LIST PRICE	SIZE*	BOX	APPROX. WT. LBS.	PART # 316 S.S.	LIST PRICE
62410	---	1/8"	25	0.03	63410	---
62411	---	1/4"	25	0.06	63411	---
62412	---	3/8"	25	0.07	63412	---
62413	---	1/2"	25	0.13	63413	---
62414	---	3/4"	25	0.18	63414	---
62415	---	1"	25	0.24	63415	---
62416	---	1-1/4"	10	0.44	63416	---
62417	---	1-1/2"	10	0.51	63417	---
62418	---	2"	5	0.79	63418	---
62419	---	2-1/2"	1	1.28		
62420	---	3"	1	1.87	63420	---
62421	---	4"	1	2.80	63421	---

REDUCING COUPLING 304 & 316 150#

PART # 304 S.S	LIST PRICE	SIZE	BOX	APPROX. WT. LBS.	PART # 316 S.S.	LIST PRICE
62430	---	1/4" x 1/8"	25	0.04	63430	---
62431	---	3/8" x 1/8"	25	0.04	63431	---
62432	---	3/8" x 1/4"	25	0.04	63432	---
62433	---	1/2" x 1/8"	25	0.09	63433	---
62434	---	1/2" x 1/4"	25	0.09	63434	---
62435	---	1/2" x 3/8"	25	0.09	63435	---
62455	---	3/4" x 1/8"	25	0.13	63455	---
62436	---	3/4" x 1/4"	25	0.11	63436	---
62437	---	3/4" x 3/8"	25	0.13	63437	---
62438	---	3/4" x 1/2"	25	0.15	63438	---
		1" x 1/4"	25	0.25	63459	---
62440	---	1" x 3/8"	25	0.22	63440	---
62441	---	1" x 1/2"	25	0.24	63441	---
62442	---	1" x 3/4"	25	0.24	63442	---
62445	---	1-1/4" x 3/4"	10	0.33	63445	---
62446	---	1-1/4" x 1"	10	0.35	63446	---
62447	---	1-1/2" x 1/2"	10	0.40	63447	---
62448	---	1-1/2" x 3/4"	10	0.42	63448	---
62449	---	1-1/2" x 1"	10	0.44	63449	---
62450	---	1-1/2" x 1-1/4"	10	0.46	63450	---
62459		2" x 1/2"				
62451	---	2" x 3/4"				
62452	---	2" x 1"	5	0.57	63452	---
62453	---	2" x 1-1/4"	5	0.62	63453	---
62454	---	2" x 1-1/2"	5	0.62	63454	---
62462		2-1/2" x 2"				
62428	---	3" x 1"	1	1.82		
62456 62457	---	3" x 2" 4" x 3"	1	2.25		

OD MACHINED COUPLING 304 & 316 150#

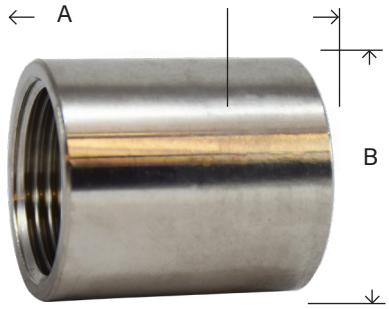

PART # 304 S.S	LIST PRICE	SIZE	A	B	BOX	APPROX. WT. LBS.	PART # 316 S.S.	LIST PRICE
62410B	---	1/8"	0.76	0.56	25	0.04	63410B	---
62411B	---	1/4"	0.94	0.71	25	0.04	63411B	---
62412B	---	3/8"	0.98	0.84	25	0.07	63412B	---
62413B	---	1/2"	1.33	1.01	25	0.09	63413B	---
62414B	---	3/4"	1.41	1.27	25	0.16	63414B	---
62415B	---	1"	1.69	1.54	10	0.21	63415B	---
62416B	---	1-1/4"	1.93	1.90	10	0.31	63416B	---
62417B	---	1-1/2"	1.93	2.16	5	0.41	63417B	---
62418B	---	2"	1.96	2.66	5	0.68	63418B	---
62420B	---	3"	3.23	3.76	1			

WARNING: This product can expose you to chemicals, including lead, which are known to the State of California to cause cancer and birth defects or other reproductive harm. For more information, visit www.P65Warnings.ca.gov

304 AND 316 150# SS FITTINGS

PLUMBING

HALF COUPLING
304 & 316 150#

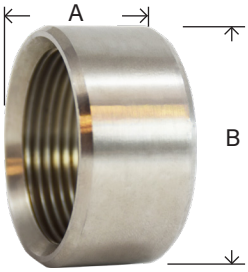

PART # 304 S.S	LIST PRICE	SIZE	A	B	BOX	APPROX. WT. LBS.	PART # 316 S.S.	LIST PRICE
62770		1/8"						
62771	---	1/4"	0.39	0.70	25	0.02	63771	---
62772	---	3/8"	0.45	0.82	25	0.02		---
62773	---	1/2"	0.57	1.02	25	0.09	63773	---
62774	---	3/4"	0.67	1.22	25	0.11		---
62775	---	1"	0.79	1.47	25	0.13	63775	---
62776	---	1-1/4"	0.86	1.88	10	0.24		---
62777	---	1-1/2"	0.94	2.10	10	0.26		---
62778	---	2"	1.06	2.60	5	0.44	63778	---
62779		3"						

UNION
304 & 316 150#

- STAINLESS STEEL SEAT

PART # 304 S.S	LIST PRICE	SIZE	BOX	APPROX. WT. LBS.	PART # 316 S.S.	LIST PRICE
62600	---	1/8"	25	0.09		---
62601	---	1/4"	25	0.13	63601	---
62602	---	3/8"	25	0.22	63602	---
62603	---	1/2"	25	0.26	63603	---
62604	---	3/4"	25	0.46	63604	---
62605	---	1"	10	0.60	63605	---
62606	---	1-1/4"	5	0.90	63606	---
62607	---	1-1/2"	5	1.10	63607	---
62608	---	2"	1	1.81	63608	---
62609		2-1/2"				
62610	---	3"	1	3.40		---

CAP - CAST
304 & 316 150#

PART # 304 S.S	LIST PRICE	SIZE	BOX	APPROX. WT. LBS.	PART # 316 S.S.	LIST PRICE
62470	---	1/8"	25	0.02	63470	---
62471	---	1/4"	25	0.02	63471	---
62472	---	3/8"	25	0.04	63472	---
62473	---	1/2"	25	0.07	63473	---
62474	---	3/4"	25	0.11	63474	---
62475	---	1"	10	0.18	63475	---
62476	---	1-1/4"	10	0.29	63476	---
62477	---	1-1/2"	10	0.40	63477	---
62478	---	2"	10	0.60	63478	---
62480	---	3"	1	1.28	63480	---
62481	---	4"	1	1.54		

HEX CAP - BARSTOCK
304 & 316 150#

PART # 304 S.S	LIST PRICE	SIZE	BOX	APPROX. WT. LBS.	PART # 316 S.S.	LIST PRICE
62075	---	1/8"	25	0.04	63075	---
62076	---	1/4"	25	0.09	63076	---
62077	---	3/8"	25	0.11		---
62078	---	1/2"	25	0.13	63078	---
62079	---	3/4"	25	0.22		----

WARNING: This product can expose you to chemicals, including lead, which are known to the State of California to cause cancer and birth defects or other reproductive harm. For more information, visit www.P65Warnings.ca.gov

HEX BUSHING
304 & 316 150#

stainless steel:

- barbed for plastic pipe
- Well Couplings
- merchant couplings
- See End of Bronze Fitting Section

PART # 304 S.S	LIST PRICE	SIZE M X F	BOX	APPROX. WT. LBS.	PART # 316 S.S.	LIST PRICE
62500	---	1/4″ x 1/8″	25	0.04	63500	---
62501	---	3/8″ x 1/8″	25	0.04	63501	---
62502	---	3/8″ x 1/4″	25	0.04	63502	---
62503	---	1/2″ x 1/8″	25	0.09		
62504	---	1/2″ x 1/4″	25	0.09	63504	---
62505	---	1/2″ x 3/8″	25	0.11	63505	---
62506	---	3/4" x 1/8"	25	0.13	63506	---
62507	---	3/4″ x 1/4″	25	0.15	63507	---
62508	---	3/4″ x 3/8″	25	0.15	63508	---
62509	---	3/4″ x 1/2″	25	0.15	63509	---
62557	---	1" x 1/8"	25	0.27		
62510	---	1" x 1/4"	25	0.22	63510	---
62511	---	1" x 3/8"	25	0.24	63511	---
62512	---	1″ x 1/2″	25	0.24	63512	---
62513	---	1″ x 3/4″	25	0.24	63513	---
62515	---	1-1/4″ x 3/8″	25	0.37		
62516	---	1-1/4″ x 1/2″	25	0.37	63516	---
62517	---	1-1/4″ x 3/4″	25	0.37	63517	---
62518	---	1-1/4″ x 1″	25	0.37	63518	---
62521	---	1-1/2″ x 1/2″	25	0.44	63521	---
62522	---	1-1/2″ x 3/4″	25	0.46	63522	---
62532	---	1-1/2″ x 1″	25	0.49	63523	---
62524	---	1-1/2″ x 1-1/4″	25	0.46	63524	---
62559	---	2" x 1/4"	10	0.95	63526	
62527	---	2″ x 1/2″	10	0.66	63527	---
62528	---	2″ x 3/4″	10	0.66	63528	---
62529	---	2″ x 1″	10	0.66	63529	---
62530	---	2″ x 1-1/4″	10	0.68	63530	---
62531	---	2″ x 1-1/2″	10	0.68	63531	---
62534	---	2-1/2″ x 1-1/2″	5	1.23	63534	---
62535	---	2-1/2″ x 2″	5	1.21	63535	---
		3" x 1"	5	2.20	63550	---
62537	---	3" x 1-1/2"	5	1.97	63537	---
62538	---	3″ x 2″	5	1.72	63538	---
62539	---	3″ x 2-1/2″	5	1.81	63539	
		4" x 2"	1	3.72	63541	---
62543	---	4″ x 3″	1	2.43	63543	---

BULKHEAD FITTINGS - STAINLESS STEEL 316 NPT (3/4-2")

PART #	SIZE	HOLE SIZE	HEX	LENGTH	LIST PRICE
63214	3/4"	1-5/8"	2-15/32"	1-13/16"	---
63215	1"	2-1/4"	3-1/16"	2-7/8"	---
63216	1-1/4"	2-1/4"	3-1/16"	2-3/8"	---
63217	1-1/2"	3"	4-1/4"	2-5/8"	---
63218	2"	3"	4-1/4"	2-5/8"	---

WARNING: This product can expose you to chemicals, including lead, which are known to the State of California to cause cancer and birth defects or other reproductive harm. For more information, visit www.P65Warnings.ca.gov

304 AND 316 150# SS FITTINGS

PLUMBING

HEX LOCKNUT 304 & 316 150#

• Straight Thread

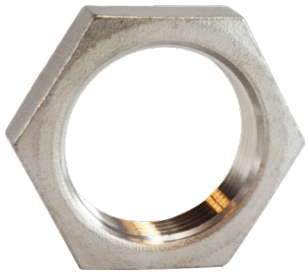

PART #304 S.S	LIST PRICE	SIZE	BOX	APPROX. WT. LBS.
62700	---	1/8"	25	0.02
62701	---	1/4″	25	0.05
62702	---	3/8″	25	0.06
62703	---	1/2″	25	0.07
62704	---	3/4″	25	0.11
62705	---	1″	25	0.15
62706	---	1-1/4″	25	0.22

CORED SQUARE HEAD PLUG 304 & 316 150#

PART # 304 S.S	LIST PRICE	SIZE	BOX	APPROX. WT. LBS.	PART # 316 S.S.	LIST PRICE
62670	---	1/8″	25	0.02	63670	---
62671	---	1/4″	25	0.03	63671	---
62672	---	3/8″	25	0.04	63672	---
62653	---	1/2″	25	0.06	63653	---
62654	---	3/4″	25	0.13	63654	---
62655	---	1″	25	0.20	63655	---
62656	---	1-1/4″	25	0.32	63656	---
62657	---	1-1/2″	10	0.41	63657	---
62658	---	2″	10	0.65	63658	---
62660	---	3″	1	0.88		

CORED HEX HEAD PLUG 304 & 316 150#

PART # 304 S.S	LIST PRICE	SIZE	BOX	APPROX. WT. LBS.	PART # 316 S.S.	LIST PRICE
62630	---	1/8″	25	0.02	63630	---
62631	---	1/4″	25	0.02	63631	---
62632	---	3/8″	25	0.04	63632	---
62633	---	1/2″	25	0.07	63633	---
62634	---	3/4″	25	0.11	63634	---
62635	---	1″	25	0.20	63635	---
62636	---	1-1/4″	25	0.31	63636	---
62637	---	1-1/2″	10	0.44	63637	---
62638	---	2″	10	0.65	63638	---
62640		3"				

HOSE NIPPLE 304 & 316 150#

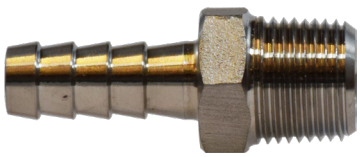

HOSE BARB X MALE PIPE

PART # 304 S.S	LIST PRICE	HOSE I.D. X MALE PIPE	BOX	APPROX. WT. LBS.	PART # 316 S.S.	LIST PRICE
73951	---	1/4″	1	0.04	973951	---
73952	---	3/8″	1	0.07	973952	---
73953	---	1/2″	1	0.13	973953	---
73954	---	3/4″	1	0.20	973954	---
73955	---	1″	1	0.33	973955	---
73956	---	1-1/4″	1	0.47	973956	---
73957	---	1-1/2″	1	0.67	973957	---
73958	---	2″	1	0.88	973958	---
73959	---	2-1/2″	1	1.45	973959	---
73960	---	3″	1	1.94	973990	---
		4″	1	3.57	973991	---

WARNING: This product can expose you to chemicals, including lead, which are known to the State of California to cause cancer and birth defects or other reproductive harm. For more information, visit www.P65Warnings.ca.gov

304 AND 316 150# SS FITTINGS

PLUMBING

REDUCING HOSE NIPPLE
304 150#

HOSE BARB X MALE PIPE

PART # 304 S.S	HOSE I.D. X MALE PIPE	BOX	APPROX. WT. LBS.	LIST PRICE
73970	1/4" x 1/8"	1	0.04	---
73971	3/8" x 1/4"	1	0.07	---
73972	1/2" x 3/8"	1	0.13	---
73973	1/2" x 1/4"	1	0.13	---
73974	3/4" x 1/2"	1	0.20	---
73975	1" x 3/4"	1	0.33	---
73976	1" x 1/2"	1	0.33	---
73977	1-1/4" x 1"	1	0.46	---
73979	1-1/2" x 1-1/4"	1	0.66	---
73980	1-1/2" x 1"	1	0.66	---
73982	2" x 1-1/4"	1	0.88	---

SOLID HEX HEAD PLUG
316 150#

PART # 316 S.S	SIZE	BOX	APPROX. WT. LBS.	LIST PRICE
63660	1/8"	25	0.04	---
63661	1/4"	25	0.06	---
63662	3/8"	25	0.08	---
63663	1/2"	25	0.12	---
63664	3/4"	25	0.15	---
63665	1"	25	0.24	---

HEX SOCKET PLUG - BARSTOCK
316 150#

PART # 316 S.S	SIZE	BOX	APPROX. WT. LBS.	LIST PRICE
63760	1/8 "	1	0.05	---
63761	1/4 "	1	0.07	---
63762	3/8 "	1	0.10	---
63763	1/2 "	1	0.14	---
63764	3/4 "	1	0.21	---
63765	1"	1	0.24	---

SOLID SQUARE HEAD PLUG
316 150#V

PART # 316 S.S	SIZE	BOX	APPROX. WT. LBS.	LIST PRICE
63680	1/8"	25	0.04	---
63681	1/4"	25	0.04	---
63682	3/8"	25	0.05	---
63683	1/2"	25	0.06	---
63684	3/4"	25	0.12	---

WARNING: This product can expose you to chemicals, including lead, which are known to the State of California to cause cancer and birth defects or other reproductive harm. For more information, visit www.P65Warnings.ca.gov

BLACK AND GALVANIZED STEEL NIPPLES

Product Specifications

Welded steel pipe nipples both galvanized and black in diameters ranging from 1/8” up to 4” in lengths from close to 12” and cut-pipe up to 120”. -200°-150° Temp Rating.

Technical Specifications

Standards: Product complies with ASTM A-53, A-733 and ANSI B1.20.1 for threading, dimensions and pipe specifications.

Pipe: Complies with ASTM A-53 mill tested schedule 40 and 80 for both Welded & Seamless Meets ANSI B36.1. All pipe is hydrostatic tested.

Galvanized: Zinc coating applied by hot dipped. Galvanized complying with ASTM A-123, NSF approved, RoHS compliant.

Black: Protected against oxidation with varnish coating.

Cutting Procedure: All pipe is roller cut. A visual inspection of seams, excessive galvanizing, mid-welds, poor galvanizing, bends, roundness, under and over weight of the pipe is made at the time it is cut. This is done for every length of pipe. Pipe lengths are cut to a tolerance of + or - 1/16” of the actual length.

Threading Procedure:

All pipe is chaser thread cut to American Standard Tapered Pipe Thread standards. This is 3/4” taper per foot. Pipe is visually inspected for roundness of threads and other visual faults as it is removed from the threading machine.

SCHEDULE 80 XXS SEAMLESS

XXS SEAMLESS

- ASTM A106 Grade B Seamless Pipe
- ASTM A 53
- WWN 351
- Standard NPT Tapered Pipe Threads as per ANSI B 1.20.1 Specification

WARNING: This product can expose you to chemicals, including lead, which are known to the State of California to cause cancer and birth defects or other reproductive harm. For more information, visit www.P65Warnings.ca.gov

BLACK AND GALVANIZED SCH 40
PLUMBING

1/8" - 27

Wall Thickness 0.068 - GradeB - Test Pressure 700 PSI - Thread Length 0.39

1/8" DIAMETER SCH 40 WELDED

PART # GALV	LIST PRICE	LENGTH	BOX/CASE	APPROX. WT. LBS.	PART # BLACK	LIST PRICE
56001	---	X Close (3/4")	50/600	0.02	57001	---
56002	---	x 1-1/2"	50/600	0.03	57002	---
56003	---	x 2"	50/500	0.04	57003	---
56004	---	x 2-1/2"	100/400	0.06	57004	---
56005	---	x 3	50/300	0.07	57005	---
56006	---	x 3-1/2"	50/300	0.08	57006	---
56007	---	x 4"	50/300	0.09	57007	---
56008	---	x 4-1/2"	50/300	0.10	57008	---
56009	---	x 5"	50/300	0.11	57009	---
56010	---	x 5-1/2"	50/300	0.12	57010	---
56011	---	x 6"	50/300	0.13	57011	---
56012	---	x 7"	50/300	0.15	57012	---
56013	---	x 8"	50/300	0.18	57013	---
	---	x 9"	50/300	0.21	57014	---
56015	---	x 10"	50/300	0.25	57015	---
56017	---	x 12"	50/300	0.29	57017	---

1/4"-18

Wall Thickness 0.068 - GradeB - Test Pressure 700 PSI - Thread Length 0.39

1/4" DIAMETER SCH 40 WELDED

PART # GALV	LIST PRICE	LENGTH	BOX/CASE	APPROX. WT. LBS.	PART # BLACK	LIST PRICE
56020	---	X Close (7/8")	50/600	0.04	57020	---
56021	---	x 1-1/2"	125/500	0.06	57021	---
56022	---	x 2"	125/500	0.06	57022	---
56023	---	x 2-1/2"	100/400	0.08	57023	---
56024	---	x 3	50/300	0.10	57024	---
56025	---	x 3-1/2"	50/300	0.12	57025	---
56026	---	x 4"	50/300	0.14	57026	---
56027	---	x 4-1/2"	50/300	0.17	57027	---
56028	---	x 5"	50/300	0.19	57028	---
56029	---	x 5-1/2"	50/300	0.21	57029	---
56030	---	x 6"	50/300	0.23	57030	---
56031	---	x 7"	50/100	0.27	57031	---
56032	---	x 8"	50/100	0.31	57032	---
	---	x 9"	50/100	0.35	57033	---
56034	---	x 10"	50/100	0.40	57034	---
56035	---	x 11"	50/100	0.44	57035	---
56036	---	x 12"	50/100	0.48	57036	---
56038	---	x 18"	50/100	0.54		

WARNING: This product can expose you to chemicals, including lead, which are known to the State of California to cause cancer and birth defects or other reproductive harm. For more information, visit www.P65Warnings.ca.gov

BLACK AND GALVANIZED SCH 40
PLUMBING

3/8" DIAMETER SCH 40 WELDED

Wall Thickness 0.091 - Grade B - Test Pressure 700 PSI - Thread Length 0.6

PART # GALV	LIST PRICE	LENGTH	BOX/CASE	APPROX. WT. LBS.	PART # BLACK	LIST PRICE
56040	---	X Close (1")	50/600	0.05	57040	---
56041	---	x 1-1/2"	125/500	0.07	57041	---
56042	---	x 2"	125/500	0.08	57042	---
56043	---	x 2-1/2"	100/400	0.11	57043	---
56044	---	x 3"	50/300	0.13	57044	---
56045	---	x 3-1/2"	50/300	0.16	57045	---
56046	---	x 4"	50/300	0.19	57046	---
56047	---	x 4-1/2"	50/200	0.21	57047	---
56048	---	x 5"	50/150	0.24	57048	---
56049	---	x 5-1/2"	50/150	0.27	57049	---
56050	---	x 6"	50/100	0.29	57050	---
56051	---	x 7"	50/100	0.35	57051	---
56052	---	x 8"	50/100	0.40	57052	---
	---	x 9"	50/100	0.45	57053	---
56054	---	x 10"	50/100	0.51	57054	---
56055	---	x 11"	50/100	0.56	57055	---
56056	---	x 12"	50/100	0.62	57056	---
56430	---	x 18"	5/10	0.71	57430	---
		x 24"	1/1	1.02	57431	---
		x 36"	1/1	1.54	57433	----

1/2" DIAMETER SCH 40 WELDED

Wall Thickness 0.109 - Grade B - Test Pressure 700 PSI - Thread Length 0.78

PART # GALV	LIST PRICE	LENGTH	BOX/CASE	APPROX. WT. LBS.	PART # BLACK	LIST PRICE
56060	---	X Close (1-1/8")	50/600	0.08	57060	---
56061	---	x 1-1/2"	125/500	0.08	57061	---
56062	---	x 2"	125/500	0.12	57062	---
56063	---	x 2-1/2"	100/400	0.15	57063	---
56064	---	x 3"	50/300	0.19	57064	---
56065	---	x 3-1/2"	50/300	0.23	57065	---
56066	---	x 4"	50/300	0.27	57066	---
56067	---	x 4-1/2"	50/200	0.30	57067	---
56068	---	x 5"	50/150	0.34	57068	---
56069	---	x 5-1/2"	50/150	0.38	57069	---
56070	---	x 6"	50/100	0.42	57070	---
56071	---	x 7"	50/100	0.49	57071	---
56072	---	x 8"	50/100	0.57	57072	---
56073	---	x 9"	50/100	0.65	57073	---
56074	---	x 10"	50/100	0.72	57074	---
56075	---	x 11"	50/100	0.80	57075	---
56076	---	x 12"	40/80	0.87	57076	---
56240	---	x 18"	1/3	1.29	57240	---
56241	---	x 24"	1/3	1.74	57241	---
56242	---	x 30"	1/3	2.16	57242	---
56243	---	x 36"	1/3	2.61	57243	---
56245	---	x 48"	1/3	3.48	57245	---
56246	---	x 60"	1/3	4.35	57246	---
56247	---	x 72"	1/3	5.22	57247	---

WARNING: This product can expose you to chemicals, including lead, which are known to the State of California to cause cancer and birth defects or other reproductive harm. For more information, visit www.P65Warnings.ca.gov

3/4" DIAMETER SCH 40 WELDED

Wall Thickness 0.113 - Grade B - Test Pressure 700 PSI - Thread Length 0.79

Part # Galv	List Price	Length	Box/Case	Approx. Wt. Lbs.	Part # Black	List Price
56080	---	X Close (1-3/8")	50/300	0.13	57080	---
56081	---	x 1-1/2"	125/250	0.10	57081	---
56082	---	x 2"	125/250	0.15	57082	---
56083	---	x 2-1/2"	50/250	0.20	57083	---
56084	---	x 3"	50/200	0.24	57084	---
56085	---	x 3-1/2"	50/150	0.29	57085	---
56086	---	x 4"	50/150	0.34	57086	---
56087	---	x 4-1/2"	50/150	0.39	57087	---
56088	---	x 5"	50/150	0.43	57088	---
56089	---	x 5-1/2"	60/120	0.48	57089	---
56090	---	x 6"	50/100	0.53	57090	---
56091	---	x 7"	50/100	0.63	57091	---
56092	---	x 8"	50/100	0.72	57092	---
56093	---	x 9"	40/80	0.82	57093	---
56094	---	x 10"	40/80	0.91	57094	---
56095	---	x 11"	30/60	1.01	57095	---
56096	---	x 12"	30/60	1.10	57096	---
56250	---	x 18"	1/3	1.63	57250	---
56251	---	x 24"	1/3	2.20	57251	---
56252	---	x 30"	1/3	2.73	57252	---
56253	---	x 36"	1/3	3.30	57253	---
56255	---	x 48"	1/3	4.40	57255	---
56256	---	x 60"	1/3	5.50	57256	---
56257	---	x 72"	1/3	6.60	57257	---

WARNING: This product can expose you to chemicals, including lead, which are known to the State of California to cause cancer and birth defects or other reproductive harm. For more information, visit www.P65Warnings.ca.gov

BLACK AND GALVANIZED SCH 40

PLUMBING

1" DIAMETER SCH 40 WELDED

Wall Thickness 0.133 - Grade B - Test Pressure 700 PSI - Thread Length 0.98

PART # GALV	LIST PRICE	LENGTH	BOX/CASE	APPROX. WT. LBS.	PART # BLACK	LIST PRICE
56100	---	X Close (1-1/2")	50/200	0.16	57100	---
56101	---	x 2"	50/150	0.23	57101	---
56102	---	x 2-1/2"	50/150	0.29	57102	---
56103	---	x 3"	50/100	0.36	57103	---
56104	---	x 3-1/2"	50/100	0.43	57104	---
56105	---	x 4"	50/100	0.50	57105	---
56106	---	x 4-1/2"	50/100	0.56	57106	---
56107	---	x 5"	50/100	0.63	57107	---
56108	---	x 5-1/2"	50/100	0.70	57108	---
56109	---	x 6"	40/80	0.77	57109	---
56110	---	x 7"	25/50	0.90	57110	---
56111	---	x 8"	25/50	1.03	57111	---
56112	---	x 9"	15/30	1.17	57112	---
56113	---	x 10"	15/30	1.30	57113	---
56114	---	x 11"	15/30	1.44	57114	---
56115	---	x 12"	15/30	1.57	57115	---
56260	---	x 18"	1/3	2.34	57260	---
56261	---	x 24"	1/3	3.14	57261	---
56262	---	x 30"	1/3	3.91	57262	---
56263	---	x 36"	1/3	4.71	57263	---
56265	---	x 48"	1/3	6.28	57265	---
56266	---	x 60"	1/3	7.85	57266	---
56267	---	x 72"	1/3	9.42	57267	---

WARNING: This product can expose you to chemicals, including lead, which are known to the State of California to cause cancer and birth defects or other reproductive harm. For more information, visit www.P65Warnings.ca.gov

1-1/4" DIAMETER SCH 40 WELDED

Wall Thickness 0.14 - Grade B - Test Pressure 1300 PSI - Thread Length 1.01

PART # GALV	LIST PRICE	LENGTH	BOX/CASE	APPROX. WT. LBS.	PART # BLACK	LIST PRICE
56120	---	X Close (1-5/8")	50/100	0.25	57120	---
56121	---	x 2"	50/100	0.32	57121	---
56122	---	x 2-1/2"	50/100	0.41	57122	---
56123	---	x 3"	50/100	0.50	57123	---
56124	---	x 3-1/2"	30/60	0.60	57124	---
56125	---	x 4"	30/60	0.69	57125	---
56126	---	x 4-1/2"	30/60	0.78	57126	---
56127	---	x 5"	25/50	0.87	57127	---
56128	---	x 5-1/2"	25/50	0.96	57128	---
56129	---	x 6"	25/50	1.06	57129	---
56130	---	x 7"	15/30	1.24	57130	---
56131	---	x 8"	15/30	1.42	57131	---
56132	---	x 9"	15/30	1.61	57132	---
56133	---	x 10"	15/30	1.79	57133	---
56134	---	x 11"	10/20	1.97	57134	---
56135	---	x 12"	10/20	2.16	57135	---
56270	---	x 18"	1/3	3.22	57270	---
56271	---	x 24"	1/3	4.32	57271	---
56272	---	x 30"	1/3	3.22	57272	---
56273	---	x 36"	1/3	6.48	57273	---
56275	---	x 48"			57275	---
		x 48"	1/3	8.64	57275	---
56276		x 60"	1/3	10.80	57276	

1-1/2" DIAMETER SCH 40 WELDED

Wall Thickness 0.145 - Grade B - Test Pressure 1300 PSI - Thread Length 1.03

PART # GALV	LIST PRICE	LENGTH	BOX/CASE	APPROX. WT. LBS.	PART # BLACK	LIST PRICE
56140	---	X Close (1-3/4")	50/100	0.31	57140	---
56141	---	x 2"	40/80	0.37	57141	---
56142	---	x 2-1/2"	40/80	0.47	57142	---
56143	---	x 3"	40/80	0.58	57143	---
56144	---	x 3-1/2"	25/50	0.68	57144	---
56145	---	x 4"	25/50	0.78	57145	---
56146	---	x 4-1/2"	25/50	0.89	57146	---
56147	---	x 5"	25/50	1.10	57147	---
56148	---	x 5-1/2"	20/40	1.10	57148	---
56149	---	x 6"	15/30	1.20	57149	---
56150	---	x 7"	15/30	1.41	57150	---
56151	---	x 8"	15/30	1.62	57151	---
56152	---	x 9"	15/30	1.83	57152	---
56153	---	x 10"	1/20	2.04	57153	---
	---	x 11"	1/20	2.25	57154	---
56155	---	x 12"	1/20	2.46	57155	---
56280	---	x 18"	1/3	3.66	57280	---
56281	---	x 24"	1/3	4.92	57281	---
56282	---	x 30"	1/3	6.12	57282	---
56283	---	x 36"	1/3	7.38	57283	---
56285	---	x 48"	1/3	9.84	57285	---
		x 60"			57286	---

WARNING: This product can expose you to chemicals, including lead, which are known to the State of California to cause cancer and birth defects or other reproductive harm. For more information, visit www.P65Warnings.ca.gov

BLACK AND GALVANIZED SCH 40
PLUMBING

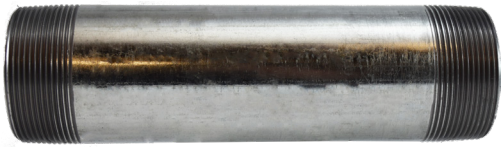

2" DIAMETER SCH 40 WELDED

Wall Thickness 0.154 - Grade B - Test Pressure 2500 PSI - Thread Length 1.06

PART # GALV	LIST PRICE	LENGTH	BOX/CASE	APPROX. WT. LBS.	PART # BLACK	LIST PRICE
56160	---	X Close (2")	40/80	0.55	57160	---
56161	---	x 2-1/2"	25/50	0.70	57161	---
56162	---	x 3"	25/50	0.86	57162	---
56163	---	x 3-1/2"	1/30	1.01	57163	---
56164	---	x 4"	1/30	1.16	57164	---
56165	---	x 4-1/2"	1/25	1.31	57165	---
56166	---	x 5"	1/30	1.47	57166	---
56167	---	x 5-1/2"	1/30	1.62	57167	---
56168	---	x 6"	1/20	1.77	57168	---
56169	---	x 7"	1/20	2.08	57169	---
56170	---	x 8"	1/20	2.39	57170	---
56171	---	x 9"	1/10	2.70	57171	---
56172	---	x 10"	1/10	3.00	57172	---
	---	x 11"	1/10	3.31	57173	---
56174	---	x 12"	1/10	3.62	57174	---
56290	---	x 18"	1/3	5.39	57290	---
56291	---	x 24"	1/3	5.26	57291	---
56292	---	x 30"	1/3	7.03	57292	---
56293	---	x 36"	1/3	10.86	57293	---
	----	x 42"	1/3	12.63		---
56295	---	x 48"	1/3	14.48	57295	---
56296	---	x 60"	1/3	18.10	57296	---
56297	---	x 72"	1/3	18.10	57297	---

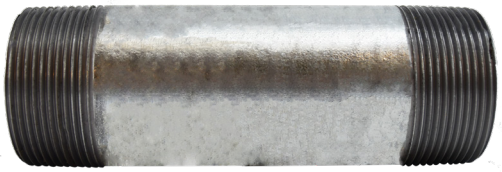

2-1/2" DIAMETER SCH 40 WELDED

Wall Thickness 0.203 - Grade B - Test Pressure 2500 PSI - Thread Length 1.57

PART # GALV	LIST PRICE	LENGTH	BOX/CASE	APPROX. WT. LBS.	PART # BLACK	LIST PRICE
56180	---	X Close (2-1/2")	1/20	1.09	57180	---
56181	---	x 3"	1/20	1.33	57181	---
56182	---	x 3-1/2"	1/20	1.57	57182	---
56183	---	x 4"	1/20	1.82	57183	---
56184	---	x 4-1/2"	1/20	2.06	57184	---
56185	---	x 5"	1/20	2.30	57185	---
56186	---	x 5-1/2"	1/10	2.54	57186	---
56187	---	x 6"	1/10	2.78	57187	---
	---	x 7"	1/10	3.27	57188	---
56189	---	x 8"	1/10	3.75	57189	---
56191	---	x 10"	1/8	4.72	57191	---
56193	---	x 12"	1/8	5.69	57193	---

WARNING: This product can expose you to chemicals, including lead, which are known to the State of California to cause cancer and birth defects or other reproductive harm. For more information, visit www.P65Warnings.ca.gov

BLACK AND GALVANIZED SCH 40
PLUMBING

3" DIAMETER SCH 40 WELDED

Wall Thickness 0.216 - Grade B - Test Pressure 2500 PSI - Thread Length 1.64

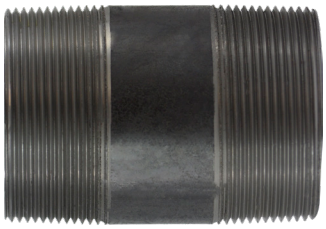

PART # GALV	LIST PRICE	LENGTH	BOX/CASE	APPROX. WT. LBS.	PART # BLACK	LIST PRICE
56200	---	X Close (2-5/8")	1/20	1.52	57200	---
56201	---	x 3"	1/20	1.76	57201	---
56202	---	x 3-1/2"	1/10	2.08	57202	---
56203	---	x 4"	1/10	2.39	57203	---
56204	---	x 4-1/2"	1/10	2.71	57204	---
56205	---	x 5"	1/10	3.03	57205	---
56206	---	x 5-1/2"	1/10	3.35	57206	---
56207	---	x 6"	1/10	3.66	57207	---
56208	---	x 7"	1/8	4.30	57208	---
56209	---	x 8"	1/8	4.93	57209	---
56210	---	x 9"	1/8	5.57	57210	---
56211	---	x 10"	1/5	6.20	57211	---
56212	---	x 11"	1/5	7.20	57212	---
56213	---	x 12"	1/5	7.47	57213	---
		x 24"	1	14.94	57311	---

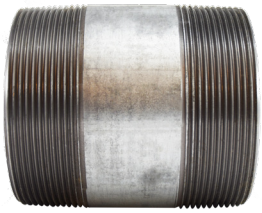

4" DIAMETER SCH 40 WELDED

Wall Thickness 0.237 - Grade B - Test Pressure 2210 PSI - Thread Length 1.74

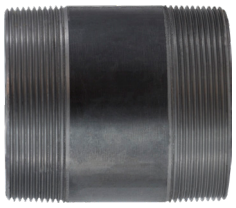

PART # GALV	LIST PRICE	LENGTH	BOX/CASE	APPROX. WT. LBS.	PART # BLACK	LIST PRICE
56220	---	X Close (2-7/8")	1/10	2.00	57220	---
56221	---	3-1/2"	1/8	2.21		---
56223	---	x 4"	1/8	3.41	57223	---
56224	---	x 4-1/2"	1/6	3.86	57224	---
56225	---	x 5"	1/6	4.31	57225	---
56226	---	x 5-1/2"	1/6	4.76	57226	---
56227	---	x 6"	1/6	5.21	57227	---
	---	x 7"	1/5	6.48	57330	---
56229	---	x 8"	1/5	7.01	57229	---
	---	x 9"	1/5	7.54	57331	---
56332	---	x 10"	1/5	8.14	57332	---
56228	---	x 12"	1/4	8.54	57228	---

WARNING: This product can expose you to chemicals, including lead, which are known to the State of California to cause cancer and birth defects or other reproductive harm. For more information, visit www.P65Warnings.ca.gov

NIPPLES AND ASSORTMENTS

PLUMBING

6" DIAMETER
SCH 40 WELDED

Wall Thickness 0.154 - Grade B - Test Pressure 2500 PSI - Thread Length 1.06

PART # GALV	LIST PRICE	LENGTH	BOX/CASE	APPROX. WT. LBS.	PART # BLACK	LIST PRICE
56300	---	X Close (3-1/8")	1/1	3.80	57300	---
		x 4"	1/1	5.30	57304	---
56301		x 6"	1/1	8.30	57301	---
		x 8"	1/1	11.30	57305	---
		x 10"			57306	---
		x 12"	1/1	17.20	57308	---

8" DIAMETER
SCH 40 WELDED

Wall Thickness 0.154 - Grade B - Test Pressure 2500 PSI - Thread Length 1.06

PART #	LENGTH	BOX/CASE	APPROX. WT. LBS.	LIST PRICE
57320	X Close (3-1/8")	1/1	5.80	---
57322	x 6"	1/1	6.50	---
57326	x 10"	1/1	19.00	---
57328	x 12"	1/1	28.55	---

SCH 40 SINGLE RUN NIPPLE BLACK

PART	DESCRIPTION	CLOSE	1-1/2	2	2-1/2	3	3-1/2	4	4-1/2	5	5 1/2	6	TOTAL PCS	LIST
973570	1/2"	1	1	1	1	1	1	1	1	1	1	1	11	
973571	3/4"	1	1	1	1	1	1	1	1	1	1	1	11	
973572	1"	1		1	1	1	1	1	1	1	1	1	10	
973573	1-1/4"	1		1	1	1	1	1	1	1	1	1	10	
973574	1-1/2"	1		1	1	1	1	1	1	1	1	1	10	
973575	2"	1			1	1	1	1	1	1	1	1	9	

SCH 40 SINGLE RUN NIPPLE GALVANIZED

PART	DESCRIPTION	CLOSE	1-1/2	2	2-1/2	3	3-1/2	4	4-1/2	5	5 1/2	6	TOTAL PCS	LIST
973670	1/2"	1	1	1	1	1	1	1	1	1	1	1	11	
973671	3/4"	1	1	1	1	1	1	1	1	1	1	1	11	
973672	1"	1		1	1	1	1	1	1	1	1	1	10	
973673	1-1/4"	1		1	1	1	1	1	1	1	1	1	10	
973674	1-1/2"	1		1	1	1	1	1	1	1	1	1	10	
973675	2"	1			1	1	1	1	1	1	1	1	9	

WARNING: This product can expose you to chemicals, including lead, which are known to the State of California to cause cancer and birth defects or other reproductive harm. For more information, visit www.P65Warnings.ca.gov

STEEL NIPPLE ASSORTMENTS

B “6” ASSORTMENTS

BLACK		LENGTH											WT. LBS.	TOTAL PIECES	
		CLOSE	1-1/2"	2"	2-1/2"	3"	3-1/2"	4"	4-1/2"	5"	5-1/2"	6"			
973567	1/2"	6	6	6	6	6	6	6	6	6	6	6	20	66	---
973568	3/4"	6	6	6	6	6	6	6	6	6	6	6	27	66	---
973569	1"	6		6	6	6	6	6	6	6	6	6	34	60	---

GALV.		LENGTH											WT. LBS.	TOTAL PIECES	
		CLOSE	1-1/2"	2"	2-1/2"	3"	3-1/2"	4"	4-1/2"	5"	5-1/2"	6"			
973667	1/2"	6	6	6	6	6	6	6	6	6	6	6	20	66	---
973668	3/4"	6	6	6	6	6	6	6	6	6	6	6	27	66	---
973669	1"	6		6	6	6	6	6	6	6	6	6	34	60	---

STEEL TOTE TRAYS

PART #	SIZE	CAPACITY	LIST PRICE
990781	1/2"	77pcs	---
990782	3/4"	66pcs	---
990783	1"	50pcs	---
990786	1-1/4"	40pcs	---
990784	1-1/2"	30pcs	---
990785	2"	27pcs	---

WARNING: This product can expose you to chemicals, including lead, which are known to the State of California to cause cancer and birth defects or other reproductive harm. For more information, visit www.P65Warnings.ca.gov

BLACK SCH 80 SEAMLESS

PLUMBING

EXTRA HEAVY SEAMLESS STEEL PIPE NIPPLES

1/8" - 27

1/8" DIAMETER SCHEDULE 80 SEAMLESS

Wall Thickness 0.094 - GradeB - Test Pressure850 PSI - Thread Length 0.39

PART #	LENGTH	BOX/CASE	APPROX. WT. LBS.	LIST PRICE
59001SMLS	x Close	40/480	0.02	---
59002SMLS	x 1-1/2"	40/480	0.03	---
59003SMLS	x 2"	100/400	0.05	---
59004SMLS	2-1/2"	100/400	0.06	---
59005SMLS	x 3"	40/240	0.08	---
59006SMLS	x 3-1/2"	40/240	0.09	---
59007SMLS	x 4"	40/240	0.11	---
59009SMLS	x 5"	40/120	0.12	---
59010SMLS	x 5-1/2"	40/120	0.13	---
59011SMLS	x 6"	40/80	0.16	---

1/4"-18

1/4" DIAMETER SCHEDULE 80 SEAMLESS

Wall Thickness 0.119 - Grade B - Test Pressure 850 PSI - Thread Length 0.59

PART #	LENGTH	BOX/CASE	APPROX. WT. LBS.	LIST PRICE
59020SMLS	x Close (7/8")	40 / 480	0.03	---
59021SMLS	x 1-1/2"	100 / 400	0.06	---
59022SMLS	x 2"	100 / 400	0.08	---
59023SMLS	x 2-1/2"	80 / 320	0.10	---
59024SMLS	x 3"	40 / 240	0.12	---
59025SMLS	x 3-1/2"	40 / 240	0.15	---
59026SMLS	x 4"	40 / 240	0.17	---
59027SMLS	x 4-1/2"	40 / 120	0.19	---
59028SMLS	x 5"	40 / 120	0.21	---
59029SMLS	x 5-1/2"	40 / 80	0.24	---
59030SMLS	x 6"	40 / 80	0.26	---
59032SMLS	x 8"	40 / 80	0.35	---
59034SMLS	x 10"	40 / 80	0.44	---
59036SMLS	x 12"	40 / 80	0.53	---

WARNING: This product can expose you to chemicals, including lead, which are known to the State of California to cause cancer and birth defects or other reproductive harm. For more information, visit www.P65Warnings.ca.gov

3/8"-18

3/8" DIAMETER SCHEDULE 80 SEAMLESS

Wall Thickness 0.126 - Grade B - Test Pressure 850 PSI - Thread Length 0.6

PART #	LENGTH	BOX/CASE	APPROX. WT. LBS.	LIST PRICE
59040SMLS	X Close (3/8")	40 / 480	0.05	---
59041SMLS	x 1-1/2"	100 / 400	0.08	---
59042SMLS	x 2"	100 / 400	0.11	---
59043SMLS	x 2-1/2"	80 / 320	0.14	---
59044SMLS	x 3"	40 / 240	0.17	---
59045SMLS	x 3-1/2"	40 / 240	0.20	---
59046SMLS	x 4"	40 / 240	0.23	---
59047SMLS	x 4-1/2"	40 / 160	0.26	---
59048SMLS	x 5"	40 / 120	0.29	---
59049SMLS	x 5-1/2"	40 / 120	0.32	---
59050SMLS	x 6"	40 / 80	0.35	---
59056SMLS	x 12"	40/80	0.65	---

1/2" - 14

1/2" DIAMETER SCHEDULE 80 SEAMLESS

Wall Thickness 0.147 - Grade B - Test Pressure 850 PSI - Thread Length 0.78

PART #	LENGTH	BOX/CASE	APPROX. WT. LBS.	LIST PRICE
59060SMLS	X Close (1-1/8")	40 / 480	0.07	---
59061SMLS	x 1-1/2"	100 / 400	0.11	---
59062SMLS	x 2"	100 / 400	0.15	---
59063SMLS	x 2-1/2"	80 / 320	0.20	---
59064SMLS	x 3"	40 / 240	0.24	---
59065SMLS	x 3-1/2"	40 / 240	0.29	---
59066SMLS	x 4"	40 / 240	0.33	---
59067SMLS	x 4-1/2"	40 / 160	0.38	---
59068SMLS	x 5"	40 / 120	0.42	---
59069SMLS	x 5-1/2"	40 / 120	0.47	---
59070SMLS	x 6"	40 / 80	0.51	---
59071SMLS	x 7"	40 / 80	0.60	---
59072SMLS	x 8"	40 / 80	0.69	---
59074SMLS	x 10"	40 / 80	0.88	---
59076SMLS	x 12"	32 / 64	1.06	---

WARNING: This product can expose you to chemicals, including lead, which are known to the State of California to cause cancer and birth defects or other reproductive harm. For more information, visit www.P65Warnings.ca.gov

BLACK SCH 80 SEAMLESS

PLUMBING

3/4" - 14

3/4" DIAMETER SCHEDULE 80 SEAMLESS

Wall Thickness 0.154 - Grade B - Test Pressure 850 PSI - Thread Length 0.79

PART #	LENGTH	BOX/CASE	APPROX. WT. LBS.	LIST PRICE
59080SMLS	X Close (1-3/8")	40/240	0.13	---
59081SMLS	x 1-1/2"	100/200	0.15	---
59082SMLS	x 2"	100/200	0.21	---
59083SMLS	x 2-1/2"	40/160	0.27	---
59084SMLS	x 3"	40/160	0.33	---
59085SMLS	x 3-1/2"	40/120	0.39	---
59086SMLS	x 4"	40/120	0.45	---
59087SMLS	x 4-1/2"	40/120	0.51	---
59088SMLS	x 5"	40/120	0.57	---
59089SMLS	x 5-1/2"	48/96	0.64	---
59090SMLS	x 6"	40/80	0.69	---
59091SMLS	x 7"	40/80	0.82	---
59092SMLS	x 8"	40/80	0.94	---
59094SMLS	x 10"	32/64	1.19	---
59096SMLS	x 12"	24/48	1.44	---

1" - 11 1/2

1" DIAMETER SCHEDULE 80 SEAMLESS

Wall Thickness 0.179 - Grade B - Test Pressure 850 PSI - Thread Length 0.98

PART #	LENGTH	BOX/CASE	APPROX. WT. LBS.	LIST PRICE
59100SMLS	X Close (1-1/2")	40 / 160	0.21	---
59101SMLS	x 2"	40 / 120	0.30	---
59102SMLS	x 2-1/2"	40 / 120	0.37	---
59103SMLS	x 3"	40 / 80	0.47	---
59104SMLS	x 3-1/2"	40 / 80	0.56	---
59105SMLS	x 4"	40 / 80	0.65	---
59106SMLS	x 4-1/2"	40 / 80	0.74	---
59107SMLS	x 5"	40 / 80	0.83	---
59108SMLS	x 5-1/2"	40 / 80	0.92	---
59109SMLS	x 6"	32 / 64	1.01	---
59110SMLS	x 7"	20 / 40	1.19	---
59111SMLS	x 8"	20 / 40	1.37	---
59112SMLS	x 9"	20 / 40	1.55	---
59113SMLS	x 10"	12 / 24	1.74	---
59115SMLS	x 12"	12 / 24	2.10	---

WARNING: This product can expose you to chemicals, including lead, which are known to the State of California to cause cancer and birth defects or other reproductive harm. For more information, visit www.P65Warnings.ca.gov

1-1/4" DIAMETER SCHEDULE 80 SEAMLESS

Wall Thickness 0.191 - Grade B - Test Pressure 1900 PSI - Thread Length 1.01

PART #	LENGTH	BOX/CASE	APPROX. WT. LBS.	LIST PRICE
59120SMLS	X Close (1-5/8")	40 / 80	0.31	---
59121SMLS	x 2"	40 / 80	0.42	---
59122SMLS	x 2-1/2"	40 / 80	0.52	---
59123SMLS	x 3"	40 / 80	0.64	---
59124SMLS	x 3-1/2"	24 / 48	0.77	---
59125SMLS	x 4"	24 / 48	0.90	---
59126SMLS	x 4-1/2"	24 / 48	1.02	---
59127SMLS	x 5"	20 / 40	1.15	---
59128SMLS	x 5-1/2"	20 / 40	1.27	---
59129SMLS	x 6"	20 / 40	1.40	---
59130SMLS	x 7"	20 / 40	1.65	---
59131SMLS	x 8"	12 / 24	1.90	---
59132SMLS	x 9"	12 / 24	2.15	---
59133SMLS	x 10"	12 / 24	2.40	---
59134SMLS	x 11"	8 / 16	2.65	---
59135SMLS	x 12"	8 / 16	2.90	---

1-1/2" DIAMETER SCHEDULE 80 SEAMLESS

Wall Thickness 0.2 - Grade B - Test Pressure 1900 PSI - Thread Length 1.03

PART #	LENGTH	BOX/CASE	APPROX. WT. LBS.	LIST PRICE
59140SMLS	X Close (1-3/4")	40 / 80	0.41	---
59141SMLS	x 2"	32 / 64	0.51	---
59142SMLS	x 2-1/2"	32 / 64	0.64	---
59143SMLS	x 3"	32 / 64	0.78	---
59144SMLS	x 3-1/2"	20 / 40	0.94	---
59145SMLS	x 4"	20 / 40	1.09	---
59146SMLS	x 4-1/2"	20 / 40	1.23	---
59147SMLS	x 5"	20 / 40	1.39	---
59148SMLS	x 5-1/2"	16 / 32	1.54	---
59149SMLS	x 6"	12 / 24	1.69	---
59150SMLS	x 7"	12 / 24	2.00	---
59151SMLS	x 8"	12 / 24	2.30	---
59153SMLS	x 10"	8 / 16	2.90	---
59155SMLS	x 12"	8 / 16	3.51	---

WARNING: This product can expose you to chemicals, including lead, which are known to the State of California to cause cancer and birth defects or other reproductive harm. For more information, visit www.P65Warnings.ca.gov

BLACK SCH 80 SEAMLESS

PLUMBING

2" DIAMETER SCHEDULE 80 SEAMLESS

Wall Thickness 0.218 - Grade B - Test Pressure 2500 PSI - Thread Length 1.06

PART #	LENGTH	BOX/CASE	APPROX. WT. LBS.	LIST PRICE
59160SMLS	X Close (2")	32/64	0.30	---
59161SMLS	x 2-1/2"	20 / 40	0.80	---
59162SMLS	x 3"	20 / 40	1.10	---
59163SMLS	x 3-1/2"	12 / 24	1.31	---
59164SMLS	x 4"	12 / 24	1.52	---
59165SMLS	x 4-1/2"	12 / 24	1.72	---
59166SMLS	x 5"	12 / 24	1.94	---
59167SMLS	x 5-1/2"	12 / 24	2.15	---
59168SMLS	x 6"	8 / 16	2.35	---
59169SMLS	x 7"	8 / 16	2.78	---
59170SMLS	x 8"	8 / 16	3.19	---
59171SMLS	x 9"	1 / 8	3.62	---
59172SMLS	x 10"	1 / 8	4.03	---
59173SMLS	x 11"	1 / 8	4.44	---
59174SMLS	x 12"	1 / 8	4.87	---
59197SMLS	x 24"	1/1	9.74	---

2-1/2" DIAMETER SCHEDULE 80 SEAMLESS

Wall Thickness 0.276 - Grade B - Test Pressure 2500 PSI - Thread Length 1.57

PART #	LENGTH	BOX/CASE	APPROX. WT. LBS.	LIST PRICE
59180SMLS	x Close (2-1/2")	1 / 16	1.25	---
59181SMLS	x 3"	1 / 16	1.57	---
59182SMLS	x 3-1/2"	1 / 16	1.82	---
59183SMLS	x 4"	1 / 16	2.15	---
59184SMLS	x 4-1/2"	1 / 16	1.75	---
59185SMLS	x 5"	1 / 16	2.78	---
59186SMLS	x 5-1/2"	1 / 8	2.25	---
59187SMLS	x 6"	1 / 8	3.41	---
59188SMLS	x 7"	1 / 8	3.89	---
59189SMLS	x 8"	1 / 8	4.69	---
59190SMLS	x 9"	1 / 8	5.34	---
59191SMLS	x 10"	1 / 6	5.97	---
59192SMLS	x 11"	1 / 6	4.89	---
59193SMLS	x 12"	1 / 5	7.26	---

WARNING: This product can expose you to chemicals, including lead, which are known to the State of California to cause cancer and birth defects or other reproductive harm. For more information, visit www.P65Warnings.ca.gov

BLACK SCH 80 SEAMLESS
PLUMBING

3" DIAMETER SCHEDULE 80 SEAMLESS
Wall Thickness 0.3 - Grade B - Test Pressure 2500 PSI - Thread Length 1.64

PART #	LENGTH	BOX/CASE	APPROX. WT. LBS.	LIST PRICE
59200SMLS	X Close (2-5/8")	1 / 16	1.79	---
59201SMLS	x 3"	1 / 16	2.11	---
59202SMLS	x 3-1/2"	1 / 16	2.55	---
59203SMLS	x 4"	1 / 8	2.89	---
59204SMLS	x 4-1/2"	1 / 8	3.30	---
59205SMLS	x 5"	1 / 8	3.73	---
59206SMLS	x 5-1/2"	1 / 8	4.17	---
59207SMLS	x 6"	1 / 8	4.57	---
59209SMLS	x 8"	1 / 6	6.29	---
59211SMLS	x 10"	1 / 4	8.01	---
59212SMLS	x 11"	1 / 4	8.85	---
59213SMLS	x 12"	1 / 4	9.72	---

4" DIAMETER SCHEDULE 80 SEAMLESS
Wall Thickness 0.337 - Grade B - Test Pressure 2800 PSI - Thread Length 1.74

PART #	LENGTH	BOX/CASE	APPROX. WT. LBS.	LIST PRICE
59220SMLS	X Close (2-7/8")	1 / 8	2.91	---
59221SMLS	x 4"	1 / 6	4.26	---
59223SMLS	x 5"	1 / 5	5.49	---
59224SMLS	x 5-1/2"			
59225SMLS	x 6"	1 / 5	6.72	---
59227SMLS	x 8"	1 / 3	9.23	---
59228SMLS	9"			
59229SMLS	x 10"	1 / 3	11.73	---
59231SMLS	x 12"	1 / 3	14.24	---

SCHEDULE 80 SEAMLESS

6" DIAMETER

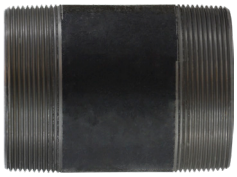

8" DIAMETER

PART #		LENGTH	BOX/CASE	APPROX. WT. LBS. 6"	APPROX. WT. LBS. 8"	PART #	
59300SMLS	---	X Close	2	3.57	4.62	59320SMLS	---
59301SMLS	---	x 6"	2	14.29	16.91	59322SMLS	---
59305SMLS	---	x 8"	2	19.05	22.54	59324SMLS	---
59308SMLS	---	x 12"	2	28.57	34.18	59328SMLS	---

WARNING: This product can expose you to chemicals, including lead, which are known to the State of California to cause cancer and birth defects or other reproductive harm. For more information, visit www.P65Warnings.ca.gov

BLACK EXTRA HEAVY XXS SEAMLESS

PLUMBING

1/2" DIAMETER BLACK EXTRA HEAVY XXS SEAMLESS

Wall Thickness 0.294 - Grade B - Test Pressure 1000 PSI - Thread Length 0.79

PART #	LENGTH	BOX/CASE	APPROX. WT. LBS.	LIST PRICE
59060SMLSXX	x Close	100 / 200	0.31	---
59062SMLSXX	x 2"	100 / 200	0.58	---
59064SMLSXX	x 3"	50 / 100	0.62	---
59066SMLSXX	x 4"	50 / 100	0.66	---
59070SMLSXX	x 6"	25 / 50	0.75	---

3/4" DIAMETER DIAMETER BLACK EXTRA HEAVY XXS SEAMLESS

Wall Thickness 0.308 - Grade B - Test Pressure 1000 PSI - Thread Length 0.79

PART #	LENGTH	BOX/CASE	APPROX. WT. LBS.	LIST PRICE
59080SMLSXX	x Close	40/240	0.55	---
59082SMLSXX	x 2"	50 / 100	0.62	---
59086SMLSXX	x 4"	25 / 50	0.68	---
59090SMLSXX	x 6"	25 / 50	0.71	---

1" DIAMETER DIAMETER BLACK EXTRA HEAVY XXS SEAMLESS

Wall Thickness 0.358 - Grade B - Test Pressure 1000 PSI - Thread Length 0.98

PART #	LENGTH	BOX/CASE	APPROX. WT. LBS.	LIST PRICE
59100SMLSXX	x close	50 / 100	0.88	---
59101SMLSXX	x 2"	50 / 100	1.07	---
59103SMLSXX	x 3"	20/40	1.10	---
59105SMLSXX	x 4"	20 / 40	1.14	---
59109SMLSXX	x 6"	20 / 40	1.75	---

2" DIAMETER DIAMETER BLACK EXTRA HEAVY XXS SEAMLESS

Wall Thickness 0.436 - Grade B - Test Pressure 2500 PSI - Thread Length 1.06

PART #	LENGTH	BOX/CASE	APPROX. WT. LBS.	LIST PRICE
59160SMLSXX	x close	1 / 25	1.36	---
59161SMLSXX	x 2-1/2"	1 / 20	1.67	---
59162SMLSXX	x 3"	1 / 20	2.09	---
59163SMLSXX	x 3-1/2"	1 / 12	2.51	---
59164SMLSXX	x 4"	1 / 12	2.86	---
59166SMLSXX	x 5"	1/12	3.04	---
59168SMLSXX	x 6"	1 / 11	3.20	---
59170SMLSXX	x 8"	1 / 8	5.86	---
59172SMLSXX	x 10"	1 / 8	7.31	---
59174SMLSXX	x 12"	1 / 8	9.34	---

WARNING: This product can expose you to chemicals, including lead, which are known to the State of California to cause cancer and birth defects or other reproductive harm. For more information, visit www.P65Warnings.ca.gov

SCH 40 AND SCH 80 GROOVE NIPPLES

PLUMBING

THREAD X GROOVE

SCH 40

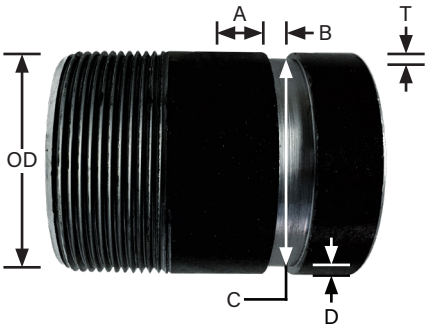

SCH 80

2" DIAMETER

PART #	LIST PRICE	BOX	WTG	LENGTH	WTG	BOX	PART #	LIST PRICE
57162TV	---	50	0.70	x 3	1.03	40	59162TV	---
57164TV	---	30	0.97	x 4	1.40	24	59164TV	---
57168TV	---	20	1.64	x 6	2.41	16	59168TV	---
57170TV	---	20	2.15	x 8	3.20	16	59170TV	---
57172TV	---	10	2.80	x 10	3.65	8	59172TV	---
57174TV	---	10	3.45	x 12	4.01	8	59174TV	---

3" DIAMETER

PART #	LIST PRICE	BOX	WTG	LENGTH	WTG	BOX	PART #	LIST PRICE
57201TV	---	20	1.26	x 3	2.01	16	59201TV	---
57203TV	---	10	1.80	x 4	3.01	8	59203TV	---
57207TV	---	10	3.17	x 6	4.87	8	59207TV	---
57209TV	---	8	4.13	x 8	5.86	6	59209TV	---
57211TV	---	5	5.48	x 10	6.19	4	59211TV	---
57213TV	---	5	6.24	x 12	6.37	4	59213TV	---

4" DIAMETER

PART #	LIST PRICE	BOX	WTG	LENGTH	WTG	BOX	PART #	LIST PRICE
57222TV	---	8	2.40	x 3	4.11	6	59222TV	---
57223TV	---	8	2.52	x 4	4.15	6	59221TV	---
57227TV	---	6	4.30	x 6	6.52	5	59225TV	---
57229TV	---	4	5.63	x 8	7.18	3	59229TV	---
57332TV	---	4	7.90	x 10	11.74	3	59231TV	---
57228TV	---	4	8.25	x 12	14.24	3	59227TV	---

NOMINAL IPS PIPE SIZE	O.D. ACTUAL	GASKET SEAT "A"	GROOVE WIDTH "B"	GROOVE DIAME-TER "C"	ACTUAL GROOVE DEPTH "D"
2	2.375	0.625	0.312	2.250	0.062
3	3.500	0.625	0.312	3.344	0.078
4	4.500	0.625	0.375	4.334	0.083

WARNING: This product can expose you to chemicals, including lead, which are known to the State of California to cause cancer and birth defects or other reproductive harm. For more information, visit www.P65Warnings.ca.gov

BLACK SCH 40 AND SCH 80 SEAMLESS GROOVE NIPPLES

PLUMBING

SCH 40

GROOVE X GROOVE

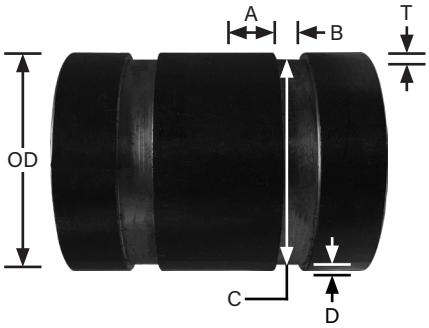

SCH 80

2" DIAMETER

PART #	LIST PRICE	BOX	WTG	LENGTH	WTG	BOX	PART #	LIST PRICE
57162V	---	50	0.70	x 3	1.03	40	59162V	---
57164V	---	30	0.97	x 4	1.40	24	59164V	---
57168V	---	20	1.64	x 6	2.41	16	59168V	---
57170V	---	20	2.15	x 8	3.20	16	59170V	---
57172V	---	10	2.80	x 10	3.65	8	59172V	---
57174V	---	10	3.45	x 12	4.01	8	59174V	---

3" DIAMETER

PART #	LIST PRICE	BOX	WTG	LENGTH	WTG	BOX	PART #	LIST PRICE
57201V	---	20	1.26	x 3	2.01	16	59201V	---
57203V	---	10	1.80	x 4	3.01	8	59203V	---
57207V	---	10	3.17	x 6	4.87	8	59207V	---
57209V	---	8	4.13	x 8	5.86	6	59209V	---
57211V	---	5	5.48	x 10	6.19	4	59211V	---
57213V	---	5	6.24	x 12	6.37	4	59213V	---

4" DIAMETER

PART #	LIST PRICE	BOX	WTG	LENGTH	WTG	BOX	PART #	LIST PRICE
57223V	---	8	2.52	x 4	4.15	6	59221V	---
57227V	---	6	4.35	x 6	6.52	5	59225V	---
57229V	---	4	5.63	x 8	7.18	3	59227V	---
57332V	---	4	7.90	x 10	11.74	3	59229V	---
57228V	---	4	8.25	x 12	14.24	3	59231V	---

SEAMLESS SCH 40 GROOVE X BEVEL NIPPLES

PART #	DIA. X LENGTH	
57162GBS	2 x 3	---
57201GBS	3 x 3	---
57222GBS	4 x 3	---
57400GBS	8 x 3	---
57500GBS	10 x 3	---
57600GBS	12 x 3	---

WARNING: This product can expose you to chemicals, including lead, which are known to the State of California to cause cancer and birth defects or other reproductive harm. For more information, visit www.P65Warnings.ca.gov

MERCHANT COUPLINGS

Product Specifications
Welded steel couplings both galvanized and black in diameters from 1/8" up to 4".

Technical Specifications
Standards: Product complies with ASTM A865 and ANSI B1.20.1 for threading, dimensions and pipe specifications. Federal Spec WW-P-404
Pipe: Complies with ASTM A-53 milltested schedule 40 and 80. Meets ANSI B36.1. All pipe is hydrostatic tested.
Galvanized: Zinc coating applied by hot dipping. Galvanized complying with ASTM-A-123.

MERCHANT COUPLINGS

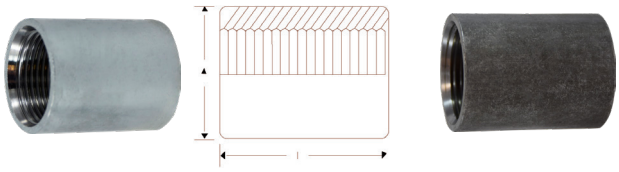

• Straight threads thru 2"

PART # GALV	LIST PRICE	SIZE	PART # BLACK	LIST PRICE
64770	---	1/8"	65770	---
64771	---	1/4"	65771	---
64772	---	3/8"	65772	---
64773	---	1/2"	65773	---
64774	---	3/4"	65774	---
64775	---	1"	65775	---
64776	---	1-1/4"	65776	---
64777	---	1-1/2"	65777	---
64778	---	2"	65778	---
64779	---	2-1/2"	65779	---
64780	---	3"	65780	---
64781	---	4"	65781	---
		5"	65782	---
		6"	65783	---

HALF MERCHANT COUPLINGS

• Straight threads thru 2"

PART # GALV	LIST PRICE	SIZE	PART # BLACK	LIST PRICE
		1/8"	65770H	
		1/4"	65771H	---
		3/8"	65772H	---
64773H	---	1/2"	65773H	---
64774H	---	3/4"	65774H	---
64775H	---	1"	65775H	---
64776H	---	1-1/4"	65776H	---
64777H	---	1-1/2"	65777H	---
64778H	---	2"	65778H	---
		2-1/2"	65779H	---
	---	3"	65780H	---
	---	4"	65781H	---

#304 STAINLESS STEEL MERCHANT COUPLINGS

PART #	SIZE	LIST PRICE
61775	1	---
61776	1-1/4	---
61777	1-1/2	---
61778	2	---

Also available:
Extra Heavy Merchant Couplings

MERCHANT COUPLINGS SPECIFICATIONS

SIZE	OUTSIDE DIAM.	LENGTH	WEIGHT 100 PCS APPROX.	QUANTITY PER BOX	THREADS PER INCH	THREADS
		INCHES	POUNDS			TYPE
1/8"	.59"	.78	3.5	1000	27	Straight
1/4"	.73"	1.18	7.5	500	18	Straight
3/8"	.86"	1.18"	9	600	18	Straight
1/2"	1.063"	1-9/16"	13.0	100	14	Straight
3/4"	1.313"	1-5/8"	28.3	50	14	Straight
1"	1.576"	2"	40.1	30	11-1/2	Straight
1-1/4"	1.900"	2-1/16"	49.5	25	11-1/2	Straight
1-1/2"	2.17"	2-3/64"	71.48	25	11-1/2	Straight
2"	2.750"	2-1/8"	112.0	20	11-1/2	Straight
2-1/2"	3.250"	3-1/8"	231.2	8	8	Taper Tapped
3"	4.000"	3-1/4"	353.8	5	8	Taper Tapped
4"	5.000"	3-1/2"	471.8	4	8	Taper Tapped
6"	7.32	4"	1000.05	4	8	Taper Tapped

WARNING: This product can expose you to chemicals, including lead, which are known to the State of California to cause cancer and birth defects or other reproductive harm. For more information, visit www.P65Warnings.ca.gov

API LINE COUPLINGS

A105 BLACK STEEL TAPER TAPPED COUPLINGS

Product Specifications
These couplings are manufactured in accordance with American Petroleum Institute specifications 5L & 5B.
All couplings are phosphated.
All sizes are taper tapped 3/4" per foot on the diameter.

*CERTIFIED BY THE AMERICAN PETROLEUM INSTITUTE

A105
- Black Steel
- API line API SL

- Each end has a short, unthreaded recess before the threads start.
- Use with sch 80 & sch. 160 nipples & pipe.
- Max. pressure: 3000PSI

API LINE PIPE COUPLINGS

PART #	NPT SIZE	THREADS PER INCH	OUTSIDE DIAMETER	LENGTH	UNIT WEIGHT	LIST PRICE
65770API	1/8"	27	0.563	1-1/16	0.04	---
65771API	1/4"	18	0.719	1-5/8	0.10	---
65772API	3/8"	18	0.875	1-5/8	0.13	---
65773API	1/2"	14	1.063	2-1/8	0.24	---
65774API	3/4"	14	1.313	2-1/8	0.35	---
65775API	1"	11.5	1.576	2-5/8	0.52	---
65776API	1-1/4"	11.5	2.054	2-3/4	1.00	---
65777API	1-1/2"	11.5	2.200	2-3/4	0.88	---
65778API	2"	11.5	2.875	2-7/8	1.83	---
65780API	3"	8	4.000	4-1/4	4.09	---
65781API	4"	8	5.200	4-1/2	7.59	---
65783API	6"	8	7.390	4-5/8	12.92	---
65784API	8"	8	9.625	5-3/4	23.18	---

WARNING: This product can expose you to chemicals, including lead, which are known to the State of California to cause cancer and birth defects or other reproductive harm. For more information, visit www.P65Warnings.ca.gov

MALLEABLE FITTINGS

- SATURATED STEAM PRESSURE 150 PSI @ 350°F
- MAX PRESSURE 300 PSI @ 150°F
- TEMP RANGE -20°F TO 350°F

ISO 9002 - CERTIFICATE OF QUALITY - UL/FM LISTED

Our quality fittings are made with care and attention to detail. With better molds we can reduce parting lines and rough edges resulting in better fluid flow. By using a low temperature galvanizing process the coating is more durable which means a longer lasting fitting. All Fittings are 100% Pressure Tested to 300# Class.
(Every fitting is subjected to an underwater fitness test to ensure the highest quality)

SPECIFICATIONS
- MATERIAL: ASTM A 197 - Cuppla Malleable Iron, ASTM A 153 - Hot dipped galvanizing • Coating ASTM A164 LS
- DIMENSIONS: ANSI B 16.3 - Malleable Iron threaded fittings, ANSI B 16.14 - Ferrous Pipe Plugs, Bushings etc..., ANSI B 16.39 - Malleable Iron threaded pipe unions.
- THREADS: ANSI B 2.1 or BS 21 ASME B1.20.1 • RoHS Compliant • Tapered Threads
- Pressure - Saturated steam 150 PSI @350°F: Max pressure 300 PSI - 150°F
- Temperature range -20 - 350°F

MALLEABLE IRON - ANSI B 16.3				
F°	CLASS 150 PSIG	SIZES 1/4-1 300#	SIZES 1 1/4-2 300#	SIZES 2 1/4-3 300#
-200-150	300	2000	1500	1000
200	265	1785	1350	910
250	225	1575	1200	825
300	185	1360	1050	735
366*	150	1150	900	650

*Permissible for service temperature up to 366°F, reflecting the temperature of saturated steam at 150 psig.

STEEL FITTINGS

- 1010 Carbon Steel, 3/4 taper threads (see hydraulic section for 7/8 taper threads.)
- Finish or coating • Black Dipped in rust resistant
- Galvanized, Zinc Plated (Inside and Out)

300LB MALLEABLE FITTINGS

MAX. PRESSURE: 300 PSI WOG @ 72°F; 150 PSI WOG SATURATED STEAM
- MEET ANSI/ ASME B1.20.1 STANDARDS
- BLACK MEET ASTM 197 STANDARDS

BULL PLUGS AND SWAGES

FLANGES

WARNING: This product can expose you to chemicals, including lead, which are known to the State of California to cause cancer and birth defects or other reproductive harm. For more information, visit www.P65Warnings.ca.gov

BLACK AND GALVANIZED IRON #150

PLUMBING

ELBOWS 90°

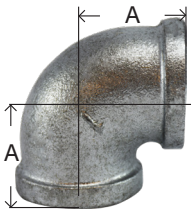

PART # GALVANIZED	LIST PRICE	SIZE	A	BOX/ CASE	APPROX. WT. LBS.	PART # BLACK	LIST PRICE
64100	---	1/8″	0.69	50/600	0.07	65100	---
64101	---	1/4″	0.81	35/420	0.10	65101	---
64102	---	3/8″	0.95	90/360	0.16	65102	---
64103	---	1/2″	1.12	50/200	0.23	65103	---
64104	---	3/4″	1.31	35/105	0.35	65104	---
64105	---	1″	1.50	20/60	0.57	65105	---
64106	---	1-1/4″	1.75	20/40	0.86	65106	---
64107	---	1-1/2″	1.94	15/30	1.31	65107	---
64108	---	2″	2.25	8/16	1.79	65108	---
64109	---	2-1/2″	2.70	6/12	3.35	65109	---
64110	---	3″	3.08	4/8	5	65110	---
64112	---	4″	3.79	1/2	9.02	65112	---
64114	---	6″	5.13	1/1	23.68	65114	---

REDUCING ELBOWS 90°

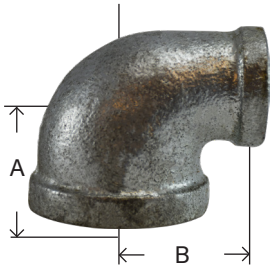

PART # GALVANIZED	LIST PRICE	SIZE	A	B	BOX/ CASE	AP-PROX. WT. LBS.	PART # BLACK	LIST PRICE
	---	3/8″ x 1/4″	0.88	0.90	90/360	0.16	65122	---
64123	---	1/2″ x 1/4″	0.97	0.98	60/240	0.21	65123	---
64124	---	1/2″ x 3/8″	1.04	1.03	60/240	0.24	65124	---
64126	---	3/4″ x 3/8″	1.12	1.13	40/160	0.31	65126	---
64127	---	3/4″ x 1/2″	1.20	1.22	40/160	0.44	65127	---
64130	---	1″ x 1/2″	1.26	1.40	25/100	0.52	65130	---
64131	---	1″ x 3/4″	1.37	1.45	50/100	0.58	65131	---
64133	---	1-1/4″ x 3/4″	1.45	1.62	15/120	0.79	65133	---
64134	---	1-1/4″ x 1″	1.58	1.67	10/40	0.80	65134	---
	---	1-1/2″ x 3/4″	1.52	1.75	10/40	0.88	65136	---
64137	---	1-1/2″ x 1″	1.65	1.80	10/40	1.07	65137	---
64138	---	1-1/2″ x 1-1/4″	1.82	1.88	15/30	1.12	65138	---
		2" x 3/4"					65139	
64140	---	2″ x 1″	1.73	2.02	14/28	1.41	65140	---
64141	---	2″ x 1-1/4″	1.90	2.10	10/20	1.53	65141	---
64142	---	2″ x 1-1/2″	2.02	2.16	10/20	1.65	65142	---
	---	2-1/2″ x 1-1/2″	2.16	2.51	6/12	2.97	65145	---
	---	2-1/2″ x 2″	2.39	2.60	6/12	3.18	65146	---
		3 x 2					65150	
		3 x 2-1/2					65151	

90° STREET EL-BOWS

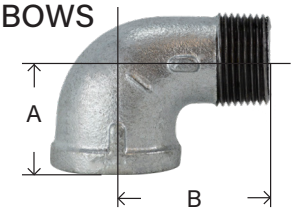

PART # GALVANIZED	LIST PRICE	SIZE	A	B	BOX/ CASE	APPROX. WT. LBS.	PART # BLACK	LIST PRICE
64160	---	1/8″	0.69	1.00	60/720	.06	65160	---
64161	---	1/4″	0.80	1.17	35/420	.10	65161	---
64162	---	3/8″	0.95	1.48	40/240	.15	65162	---
64163	---	1/2″	1.10	1.59	60/180	.22	65163	---
64164	---	3/4″	1.28	1.85	35/105	.39	65164	---
64165	---	1″	1.47	2.10	35/105	.60	65165	---
64166	---	1-1/4″	1.75	2.57	25/50	.95	65166	---
64167	---	1-1/2″	1.90	2.63	9/27	1.37	65167	---
64168	---	2″	2.21	3.19	8/16	2.25	65168	---
64169	---	2-1/2″	2.65	3.78	5/10	3.32	65169	---
64170	---	3″	3.02	4.42	4/8	5.27	65170	---
64171	---	4″	3.72	5.57	2/4	8.94	65171	---

WARNING: This product can expose you to chemicals, including lead, which are known to the State of California to cause cancer and birth defects or other reproductive harm. For more information, visit www.P65Warnings.ca.gov

BLACK AND GALVANIZED IRON #150

PLUMBING

ELBOWS 45°

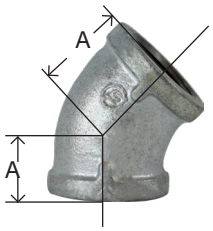

PART # GALVANIZED	LIST PRICE	SIZE	A	BOX/ CASE	APPROX. WT. LBS.	PART # BLACK	LIST PRICE
64180	---	1/8″	0.63	50/600	.07	65180	---
64181	---	1/4″	0.73	30/360	.10	65181	---
64182	---	3/8″	0.80	75/300	.14	65182	---
64183	---	1/2″	0.88	50/200	.21	65183	---
64184	---	3/4″	0.98	40/120	.33	65184	---
64185	---	1″	1.12	20/60	.50	65185	---
64186	---	1-1/4″	1.29	20/40	.74	65186	---
64187	---	1-1/2″	1.43	10/30	1.01	65187	---
64188	---	2″	1.68	12/24	1.53	65188	---
64189	---	2-1/2″	1.95	9/18	2.78	65189	---
64190	---	3″	2.17	1/10	4.49	65190	---
64191	---	4″	2.61	2/4	7.44	65191	---
64192	---	6″	3.46	1/1	18.63	65192	---

45° STREET ELBOWS

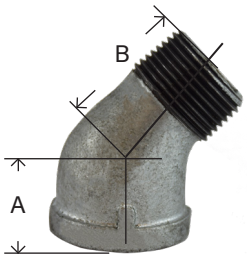

PART # GALVANIZED	LIST PRICE	SIZE	A	B	BOX/ CASE	APPROX. WT. LBS.	PART # BLACK	LIST PRICE
64200	---	1/8″	0.63	0.83	70/840	.05	65200	---
64201	---	1/4″	0.73	0.94	40/480	.09	65201	---
64202	---	3/8″	0.80	1.03	100/400	.14	65202	---
64203	---	1/2″	0.86	1.30	75/225	.19	65203	---
64204	---	3/4″	0.96	1.48	40/120	.28	65204	---
64205	---	1″	1.10	1.69	25/75	.48	65205	---
64206	---	1-1/4″	1.26	1.87	10/40	.71	65206	---
64207	---	1-1/2″	1.40	2.05	10/30	1.02	65207	---
64208	---	2″	1.65	2.38	12/24	1.68	65208	---
64209	---	2-1/2″	1.95	2.72	6/12	2.69	65209	---
64210	---	3″	2.17	3.16	3/6	4.61	65210	---
	---	4″	2.61	3.90	2/4	7.74	65211	---

CROSSES

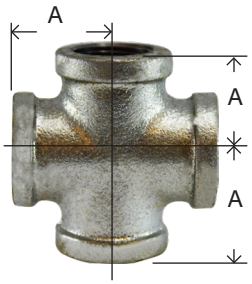

PART # GALVANIZED	LIST PRICE	SIZE	A	BOX/ CASE	APPROX. WT. LBS.	PART # BLACK	LIST PRICE
	---	1/8″	0.65	50/600	.14	65390	---
64391	---	1/4″	0.80	60/240	.17	65391	---
64392	---	3/8″	0.95	50/150	.26	65392	---
64393	---	1/2″	1.12	30/90	.42	65393	---
64394	---	3/4″	1.31	20/60	.64	65394	---
64395	---	1″	1.50	15/30	.98	65395	---
64396	---	1-1/4″	1.75	10/20	1.45	65396	---
64397	---	1-1/2″	1.94	8/16	1.90	65397	---
64398	---	2″	2.25	5/10	2.96	65398	---
	---	3″	3.06	2/4	7.71	65400	---
		4"		1/1	14.77	65401	---

WARNING: This product can expose you to chemicals, including lead, which are known to the State of California to cause cancer and birth defects or other reproductive harm. For more information, visit www.P65Warnings.ca.gov

BLACK AND GALVANIZED IRON #150

PLUMBING

TEES

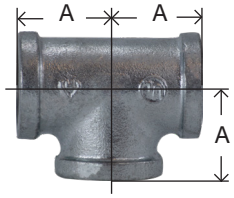

PART # GALVANIZED	LIST PRICE	SIZE	A	BOX/CASE	APPROX. WT. LBS.	PART # BLACK	LIST PRICE
64250	---	1/8″	0.69	120/480	.11	65250	---
64251	---	1/4″	0.81	75/300	.15	65251	---
64252	---	3/8″	0.95	45/180	.22	65252	---
64253	---	1/2″	1.12	40/120	.36	65253	---
64254	---	3/4″	1.31	35/70	.48	65254	---
64255	---	1″	1.50	20/40	.83	65255	---
64256	---	1-1/4″	1.75	14/28	1.29	65256	---
64257	---	1-1/2″	1.94	12/24	1.66	65257	---
64258	---	2″	2.26	8/16	2.50	65258	---
64259	---	2-1/2″	2.70	4/8	4.45	65259	---
64260	---	3″	3.08	1/6	6.72	65260	---
64261	---	4″	3.79	1/2	11.31	65261	---
64262	---	6″	5.13	1/1	30.75	65262	---

REDUCING TEES

(Same Size On Run, Reducing On Branch)

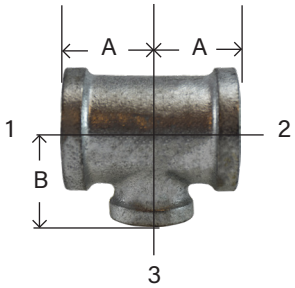

PART # GALVANIZED	LIST PRICE	SIZE (1&2) X 3	A	B	BOX/ CASE	APPROX. WT. LBS.	PART # BLACK	LIST PRICE
	---	3/8″ x 1/4″	0.81	0.90	25/300	.18	65273	---
	---	1/2″ x 1/4″	0.97	0.98	40/160	.24	65276	---
64279	---	1/2″ x 3/8″	1.04	1.03	40/160	.35	65279	---
	---	3/4″ x 1/4″	1.05	1.08	25/100	.43	65282	---
64286	---	3/4″ x 1/2″	1.20	1.18	20/80	.49	65286	---
	---	1″ x 1/4″	1.11	1.22	20/80	.51	65268	---
64269	---	1″ x 3/8″	1.18	1.27	15/60	.55	65269	---
64291	---	1″ x 1/2″	1.26	1.40	15/60	.63	65291	---
64298	---	1″ x 3/4″	1.37	1.45	12/48	.71	65298	---
64301	---	1-1/4″ x 1/2″	1.34	1.45	20/40	.91	65301	---
64303	---	1-1/4″ x 3/4″	1.45	1.62	20/40	.99	65303	---
64306	---	1-1/4″ x 1″	1.58	1.66	20/40	1.07	65306	---
64721	---	1-1/2" x 1/2"				1.12	65721	---
64316	---	1-1/2″ x 3/4″	1.41	1.75	15/30	1.23	65316	---
64318	---	1-1/2″ x 1″	1.65	1.88	10/30	1.33	65318	---
	---	1-1/2″ x 1-1/4″	1.65	1.88	12/24	1.52	65322	---
64327	---	2″ x 1/2″	1.49	1.88	10/20	1.64	65327	---
64328	---	2″ x 3/4″	1.60	1.97	10/20	1.71	65328	---
64330	---	2″ x 1″	1.73	2.02	10/20	1.88	65330	---
	---	2″ x 1-1/4″	1.86	2.06	8/16	2.03	65334	---
64336	---	2″ x 1-1/2″	1.98	2.12	8/16	2.22	65336	---
		2-1/2" x 1"				2.85	65342	---
	---	2-1/2″ x 1-1/2″	2.16	2.51	5/10	2.97	65343	---
		3" x 1-1/2"				5.19	65359	---
64351	---	3″ x 2″	2.52	2.89	3/6	5.35	65351	---

BULLHEAD TEES

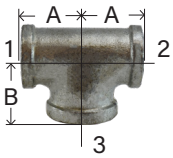

PART # GALVANIZED	LIST PRICE	SIZE (1&2) X 3	A	B	BOX/ CASE	APPROX. WT. LBS.	PART # BLACK	LIST PRICE
64280	---	1/2" x 3/4″	1.22	1.20	30/120	.4	65280	---
64289	---	3/4″ x 1″	1.45	1.37	20/120	.60	65289	---
64299	---	1″ x 1-1/4″	1.67	1.58	15/30	.96	65299	---
64300	---	1″ x 1-1/2″	1.80	1.65	9/36	1.11	65300	---
64317	---	1-1/4″ x 1-1/2″	1.88	1.82	12/24	1.07	65317	---
64319	----	1-1/2″ x 2″	2.12	1.98	8/32	2.10	65319	---
		2" x 1¼" x 2"					65335	

WARNING: This product can expose you to chemicals, including lead, which are known to the State of California to cause cancer and birth defects or other reproductive harm. For more information, visit www.P65Warnings.ca.gov

BLACK AND GALVANIZED IRON #150

PLUMBING

REDUCING TEES

REDUCING ON RUN

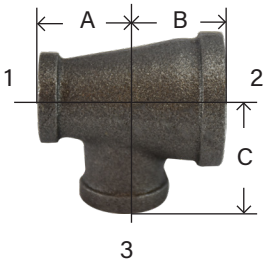

PART #	SIZE 1 X 2 X 3	A	B	C	BOX/CASE	APPROX. WT. LBS.	LIST PRICE	PART # BLACK
64287	3/4″ x 1/2″ x 1/2″	1.18	1.18	1.20	25/100	0.39	---	65287
	3/4″ x 1/2″ x 3/4″	1.28	1.20	1.28	20/80	0.49	---	65288
	1" x 1/2" x 1/2"	1.31	1.22	1.31	20/80	0.51	---	65292
	1" x 1/2" x 3/4"	1.22	1.37	1.45	20/80	0.53	---	65293
	1" x 1/2" x 1"	1.40	1.50	1.50	15/60	0.54	---	65294
	1" x 3/4" x 1/2"	1.20	1.26	1.40	20/80	0.58	---	65295
64296	1″ x 3/4″ x 3/4″	1.34	1.28	1.42	15/60	0.63	---	65296
64297	1" x 3/4" x 1"	1.45	1.50	1.50	15/60	0.62	---	65297
	1-1/4" x 1/2" x 1"							65311
	1-1/4" x 1/2" x 1¼"							65314
	1-1/4" x 3/4" x 3/4"	1.31	1.45	1.64	10/40	0.66	---	65347
	1-1/4" x 3/4" x 1"							65348
	1-1/4" x 3/4" x 1-1/4"	1.62	1.75	1.75	10/40	1.14	---	65305
64309	1-1/4″ x 1″x 1″	1.55	1.47	1.63	20/40	1.00	---	65309
	1-1/4" x 1" x 1/2"	1.26	1.34	1.53	20/40	1.10	---	65349
	1-1/4" x 1" x 3/4"						---	65350
	1-1/4" x 1" x 1-1/4"	1.30	1.36	1.44	15/30	1.21	---	65310
	1-1/2" x 3/4" x 1-1/2"							65281
64372	1-1/2" x 1" x 1"	1.50	1.65	1.78	15/30	1.28	---	65372
	1-1/2" x 1" x 1-1/2"							65323
	1-1/2" x 1-1/4" x 3/4"	1.43	1.52	1.25	15/30	1.30	---	65375
	1-1/2" x 1¼" x 1"							65325
	1-1/2" x 1-1/4" x 1-1/4"	1.75	1.82	1.88	15/30	1.35	---	65377
	2" x 3/4" x 2"						---	65267
	2" x 1" x 2"							65332
	2" x 1-1/4" x 1¼"							65302
	2" x 1-1/4" x 2"							65335
	2" x 1-1/2" x 1-1/4"	1.82	1.90	2.10	10/30	1.21	---	65312
	2" x 1-1/2" x 1-1/2" 2 x 1-1/2 x 2	1.94	2.02	2.16	10/30	1.79	---	65313 65339

MALLEABLE SERVICE TEE

(STREET TEE)

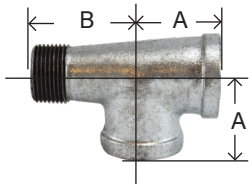

PART # GALVANIZED	LIST PRICE	SIZE	A	B	BOX/ CASE	APPROX. WT. LBS.	PART # BLACK	LIST PRICE
64364	---	3/4″	1.31	1.89	25/75	0.49	65364	---

SIDE OUTLET TEES

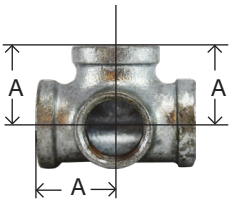

PART # GALVANIZED	LIST PRICE	SIZE	A	BOX/ CASE	APPROX. WT. LBS.	PART # BLACK	LIST PRICE
64383	---	1/2″	1.12	25/100	.39	65383	---
64385	---	1″	1.50	20/40	.88	65385	---
		1-1/2"	1.97	1/1	1.56	65387	---
		2"	2.29	1/1	1.81	65388	---

WARNING: This product can expose you to chemicals, including lead, which are known to the State of California to cause cancer and birth defects or other reproductive harm. For more information, visit www.P65Warnings.ca.gov

BLACK AND GALVANIZED IRON #150

PLUMBING

COUPLINGS

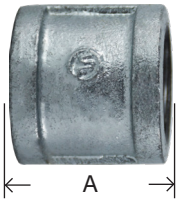

PART # GALVANIZED	LIST PRICE	SIZE	A	BOX/ CASE	APPROX. WT. LBS.	PART # BLACK	LIST PRICE
64410	---	1/8″	0.96	70/840	.07	65410	---
64411	---	1/4″	1.06	40/480	.09	65411	---
64412	---	3/8″	1.16	40/480	.13	65412	---
64413	---	1/2″	1.34	60/240	.19	65413	---
64414	---	3/4″	1.52	50/150	.28	65414	---
64415	---	1″	1.67	25/100	.45	65415	---
64416	---	1-1/4″	1.93	16/64	.66	65416	---
64417	---	1-1/2″	2.15	18/36	.84	65417	---
64418	---	2″	2.54	12/24	1.39	65418	---
64419	---	2-1/2″	2.88	8/16	2.42	65419	---
64420	---	3″	3.18	1/12	3.49	65420	---
64421	---	4″	3.69	3/6	5.81	65421	---
64422	---	6″	4.23	1/2	28.62	65422	---

REDUCING COUPLINGS

PART # GALVANIZED	LIST PRICE	SIZE	A	BOX/ CASE	APPROX. WT. LBS.	PART # BLACK	LIST PRICE
64430	---	1/4″ x 1/8″	1.00	50/600	.07	65430	---
64431	---	3/8″ x 1/8″	1.13	35/420	.09	65431	---
64432	---	3/8″ x 1/4″	1.13	30/360	.11	65432	---
64433	---	1/2″ x 1/8″	1.25	75/300	.13	65433	---
64434	---	1/2″ x 1/4″	1.25	75/300	.11	65434	---
64435	---	1/2″ x 3/8″	1.25	60/240	.15	65435	---
	---	3/4″ x 1/8″	1.44	60/240	.18	65439	---
64436	---	3/4″ x 1/4″	1.44	45/18	.19	65436	---
64437	---	3/4″ x 3/8″	1.44	45/18	.21	65437	---
64438	---	3/4″ x 1/2″	1.44	60/180	.25	65438	---
64459	---	1″ x 1/4″	1.69	45/135	.34	65459	---
64440	---	1″ x 3/8″	1.69	30/120	.35	65440	---
64441	---	1″ x 1/2″	1.69	30/120	.36	65441	---
64442	---	1″ x 3/4″	1.69	25/100	.39	65442	---
	---	1-1/4″ x 3/8″	2.06	25/75	.55	65460	---
	---	1-1/4″ x 1/2″	2.06	25/75	.53	65444	---
64445	---	1-1/4″ x 3/4″	2.06	25/75	.57	65445	---
64446	---	1-1/4″ x 1″	2.06	15/60	.61	65446	---
	---	1-1/2″ x 3/8″	2.31	20/60	.71	65443	---
64447	---	1-1/2″ x 1/2″	2.31	20/60	.69	65447	---
64448	---	1-1/2″ x 3/4″	2.31	15/60	.71	65448	---
64449	---	1-1/2″ x 1″	2.31	25/50	.78	65449	---
64450	---	1-1/2″ x 1-1/4″	2.31	12/48	.87	65450	---
64458	---	2″ x 1/2″	2.81	12/36	1.14	65458	---
64451	---	2″ x 3/4″	2.81	12/36	1.14	65451	---
64452	---	2″ x 1″	2.81	12/36	1.21	65452	---
64453	---	2″ x 1-1/4″	2.81	9/27	1.19	65453	---
64454	---	2″ x 1-1/2″	2.81	9/27	1.38	65454	---
		2½" x 1"				65455	
		2½ x 1¼				65429	
64461	---	2-1/2″ x 1-1/2″	3.25	20/40	2.07	65461	---
64462	---	2-1/2″ x 2″	3.25	7/14	2.23	65462	---
64466		3" x 1"				65466	
64486	---	3″ x 1-1/2″	3.69	6/12	3.23	65486	---
64456	---	3″ x 2″	3.69	6/12	3.30	65456	---
64463	---	3″ x 2-1/2″	3.69	5/10	3.55	65463	---
		4" x 1½"				65468	
64464	---	4″ x 2″	4.38	3/6	5.55	65464	---
64465	---	4″ x 2-1/2″	4.38	3/6	5.90	65465	---
64457	---	4″ x 3″	4.38	3/6	6.05	65457	---
		6″ x 4″	4.24	1/2	10.86	65491	----

WARNING: This product can expose you to chemicals, including lead, which are known to the State of California to cause cancer and birth defects or other reproductive harm. For more information, visit www.P65Warnings.ca.gov

BLACK AND GALVANIZED IRON #150

PLUMBING

HEX BUSHING

* INSIDE HEX

PART # GALVANIZED	LIST PRICE	SIZE M X F	A	HEX	BOX/ CASE	APPROX. WT. LBS.	PART # BLACK	LIST PRICE
64500	---	*1/4" x 1/8"	0.79	0.67	1/25	.03	65500	---
	---	*3/8" x 1/8"	0.79	0.75	1/25	.06	65501	---
64502	---	*3/8" x 1/4"	0.79	0.75	1/25	.05	65502	---
	---	1/2" x 1/8"	0.84	1.03	150/600	.09	65503	---
64504	---	1/2" x 1/4"				.08	65504	---
64505	---	1/2" x 3/8"	0.75	1.03	150/600	.07	65505	---
64506	---	3/4" x 1/8"	0.85	1.15	75/300	.14	65506	---
64507	---	3/4" x 1/4"	0.85	1.15	75/300	.13	65507	---
64508	---	3/4" x 3/8"	0.85	1.15	75/300	.12	65508	---
64509	---	3/4" x 1/2"	0.93	1.15	75/300	.10	65509	---
		1" x 1/8"					65557	
64510*	---	1" x 1/4"	1.13	1.12	50/200	.20	65510*	---
64511*	---	1" x 3/8"	1.13	1.12	50/200	.18	65511*	---
64512	---	1" x 1/2"	1.10	1.42	50/200	.21	65512	---
64513	---	1" x 3/4"	1.10	1.42	50/200	.17	65513	---
	---	1-1/4" x 1/4"	1.24	1.12	30/120	.29	65514*	---
	---	1-1/4" x 3/8"	1.24	1.12	30/120	.29	65515*	---
64516*	---	1-1/4" x 1/2"	1.24	1.24	30/120	.31	65516*	---
64517	---	1-1/4" x 3/4"	1.08	1.76	30/120	.35	65517	---
64518	---	1-1/4" x 1"	1.08	1.76	30/120	.29	65518	---
64519*	---	1-1/2" x 1/4"	1.30	1.12	25/75	.40	65519*	---
64520*	---	1-1/2" x 3/8"	1.30	1.12	25/75	.38	65520*	---
64521*	---	1-1/2" x 1/2"	1.30	1.34	25/75	.38	65521*	---
64522*	---	1-1/2" x 3/4"	1.30	1.44	25/75	.40	65522*	---
64523	---	1-1/2" x 1"	1.23	2.00	25/75	.45	65523	---
64524	---	1-1/2" x 1-1/4"	1.23	2.00	25/75	.34	65524	---
64526*	---	2" x 1/4"	1.29	1.12	20/60	.57	65526*	---
64525*	---	2" x 3/8"	1.28	1.12	20/60	.57	65525*	---
64527*	---	2" x 1/2"	1.39	1.34	20/60	.57	65527*	---
64528*	---	2" x 3/4"	1.39	1.63	20/60	.63	65528*	---
64529*	---	2" x 1"	1.39	1.77	20/60	.66	65529*	---
64530	---	2" x 1-1/4"	1.50	2.48	20/60	.74	65530	---
64531	---	2" x 1-1/2"	1.50	2.48	20/60	.61	65531	---
64546*	---	2-1/2" x 1/2"	1.51	1.34	15/30	.97	65546*	---
64547*	---	2-1/2" x 3/4"	1.51	1.63	15/30	.91	65547*	---
64532*	---	2-1/2" x 1"	1.51	1.95	15/30	.97	65532*	---
64533*	---	2-1/2" x 1-1/4"	1.51	2.39	15/30	1.03	65533*	---
64534	---	2-1/2" x 1-1/2"	1.51	2.98	15/30	1.16	65534	---
64535	---	2-1/2" x 2"	1.54	2.98	15/30	1.01	65535	---
64550	---	3" x 1"	1.61	1.95	12/24	1.41	65550	---
64549*	---	3" x 1-1/4"	1.61	2.39	12/24	1.42	65549*	---
64537*	---	3" x 1-1/2"	1.61	2.68	12/24	1.51	65537*	---
64538	---	3" x 2"	1.61	3.86	12/24	1.71	65538	---
64539	---	3" x 2-1/2"	1.61	3.86	12/24	1.68	65539	---
		3-1/2" x 3"	1.86	4.20	5/10	2.17	65555	---
64553*	---	4" x 1"	2.00	4.75	5/10	3.79	65553*	---
	---	4" x 1-1/4"	1.82	2.39	5/10	2.39	65552	---
64540	---	4" x 1-1/2"	1.82	2.68	5/10	2.39	65540	---
64541*	---	4" x 2"	1.82	3.31	5/10	2.52	65541*	---
64542*	---	4" x 2-1/2"	2.06	3.87	5/10	2.87	65542*	---
64543	---	4" x 3"	2.17	4.96	5/10	2.95	65543	---
		5" x 4"	2.16	5.34	2/4	6.80	65544	---
		6" x 2"					65558	
64549		6" x 3"					65559	
64545*	---	6" x 4"	2.33	5.79	2/4	7.11	65545*	---

Note: Add Dt To The Part# For A Double-Tapped Bushing

WARNING: This product can expose you to chemicals, including lead, which are known to the State of California to cause cancer and birth defects or other reproductive harm. For more information, visit www.P65Warnings.ca.gov

BLACK AND GALVANIZED IRON #150

PLUMBING

UNIONS

- Brass Seat

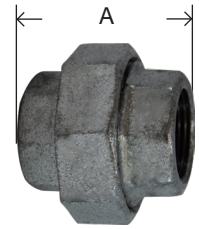

PART # GALVANIZED	LIST PRICE	SIZE	A	BOX/ CASE	APPROX. WT. LBS.	PART # BLACK	LIST PRICE
64600	---	1/8″	1.26	60/240	.17	65600	---
64601	---	1/4″	1.44	20/240	.25	65601	---
64602	---	3/8″	1.61	40/160	.37	65602	---
64603	---	1/2″	1.72	50/100	.52	65603	---
64604	---	3/4″	1.94	35/70	.78	65604	---
64605	---	1″	2.06	20/40	1.18	65605	---
64606	---	1-1/4″	2.26	15/30	1.64	65606	---
64607	---	1-1/2″	2.41	10/20	2.08	65607	---
64608	---	2″	2.75	6/12	3.24	65608	---
64609	---	2-1/2″	3.22	4/8	5.31	65609	---
64610	---	3″	3.50	4/8	6.94	65610	---
64611	---	4″	3.85	2/4	12.02	65611	---

SQUARE HEAD PLUGS

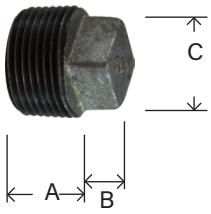

PART # GALVANIZED	LIST	SIZE	A	B	C	BOX/ CASE	APPROX. WT. LBS.	PART # BLACK	LIST PRICE
		*1/8"	0.41	0.23	0.30	1/25	.02	65650	---
64651	---	*1/4″	0.48	0.28	0.38	1/25	.03	65651	---
64652	---	*3/8″	0.53	0.31	0.43	1/25	.04	65652	---
64653	---	1/2″	0.58	0.38	0.56	50/600	.08	65653	---
64654	---	3/4″	0.65	0.44	0.63	30/360	.13	65654	---
64655	---	1″	0.75	0.50	0.82	20/240	.22	65655	---
64656	---	1-1/4″	0.82	0.56	0.94	40/120	.33	65656	---
64657	---	1-1/2″	0.85	0.62	1.13	30/90	.41	65657	---
64658	---	2″	0.91	0.68	1.31	20/60	.68	65658	---
64659	---	2-1/2″	1.26	0.74	1.50	16/64	.89	65659	---
64660	---	3″	1.16	0.80	1.69	16/32	1.68	65660	---
64661	---	4″	1.22	1.00	2.28	6/12	3.02	65661	---
64662		6"	1.85	1.13	5.97	5/10	11.41	65662	---
		8"				1/1		65664	---

CAPS

PART # GALVANIZED	LIST PRICE	SIZE	A	BOX/ CASE	APPROX. WT. LBS.	PART # BLACK	LIST PRICE
64470	---	1/8"	0.55	1/25	.03	65470	---
64471	---	1/4"	0.62	80/960	.07	65471	---
64472	---	3/8″	0.74	60/720	.08	65472	---
64473	---	1/2″	0.87	75/300	.13	65473	---
64474	---	3/4″	0.97	40/160	.18	65474	---
64475	---	1″	1.16	25/100	.30	65475	---
64476	---	1-1/4″	1.28	20/80	.47	65476	---
64477	---	1-1/2″	1.33	18/54	.66	65477	---
64478	---	2″	1.45	12/36	.99	65478	---
64479	---	2-1/2″	1.70	20/40	1.58	65479	---
64480	---	3″	1.80	12/24	2.51	65480	---
64481	---	4″	2.08	6/12	4.09	65481	---
64482	---	6″	2.55	2/4	5.18	65482	---

* Use steel fittings for smaller sizes. See Steel Fittings for Galvanized and Black Steel Fittings.

WARNING: This product can expose you to chemicals, including lead, which are known to the State of California to cause cancer and birth defects or other reproductive harm. For more information, visit www.P65Warnings.ca.gov

BLACK AND GALVANIZED IRON #150

PLUMBING

LATERAL YS

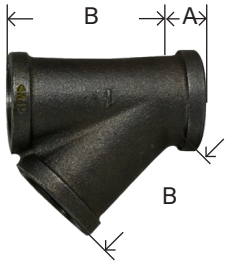

PART #	SIZE	A	B	CASE	WEIGHT	LIST PRICE	PART #
64963	1/2	2.32	1.71	120	.35	---	65963
64964	3/4	2.77	2.05	60	.58	---	65964
	1	3.28	2.42	40	.97	---	65965
	1-1/4	3.94	2.92	24	1.44	---	65966
	1-1/2	4.38	3.28	16	1.93	---	65967
64968	2	5.41	3.98	8	3.12	---	65968
	3	7.26	5.55	2	8.36	---	65970
	4	8.98	6.97	2	14.88	---	65971

LOCKNUTS
*STRAIGHT THREAD

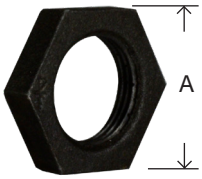

PART # GALV	LIST PRICE	SIZE	A HEX	THICKNESS	BOX/ CASE	WEIGHT	PART # BLACK	LIST PRICE
64703	---	1/2		0.31	150/600	0.08		---
64704	---	3/4		0.34	90/360	0.13	65704	---
64705	---	1		0.38	60/240	0.19		---
64706	---	1-1/4		0.42	45/180	0.27	65706	---
64707	---	1-1/2		0.47	45/135	0.47		---
64708	---	2		0.53	25/75	0.56		---

RIGHT & LEFT COUPLINGS

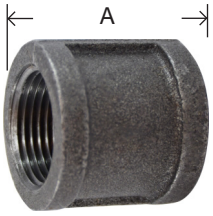

PART # GALV	LIST PRICE	SIZE	A	CASE	WEIGHT	PART # BLACK	LIST PRICE
		3/4	1.52	150	0.28	65574	---
		1	1.67	100	0.45	65575	---
		1-1/4	1.93	64	0.66	65576	---

SIDE OUTLET ELBOW

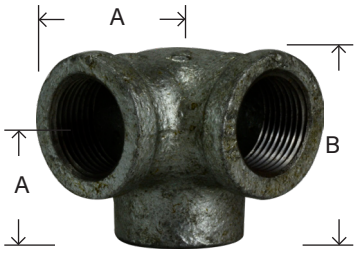

PART # GALV	LIST PRICE	SIZE	A	B	CASE	PART # BLACK	LIST PRICE
64583	---	1/2	1.10		135	65583	---
64584	---	3/4	1.30		80	65584	---
64585	---	1	1.50		40		

WARNING: This product can expose you to chemicals, including lead, which are known to the State of California to cause cancer and birth defects or other reproductive harm. For more information, visit www.P65Warnings.ca.gov

BLACK AND GALVANIZED IRON #150

PLUMBING

FLOOR FLANGES

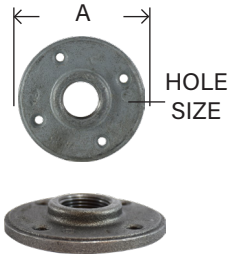

PART # GALVA-NIZED	LIST PRICE	SIZE	A	THICK-NESS	HOLE SIZE	BOX/ CASE	APPROX. WT. LBS.	PART # BLACK	LIST PRICE
		3/8"						65690	
64692	---	1/2″	3.50	0.50	0.25	25/100	.63	65692	---
64693	---	3/4″	3.50	0.63	0.25	15/45	.73	65693	---
64694	---	1″	4.00	0.69	0.25	15/45	1.02	65694	---
64695	---	1-1/4″	4.00	0.75	0.25	15/30	1.00	65695	---
64696	---	1-1/2″	4.50	0.87	0.31	8/24	1.37	65696	---
64697		2"						65697	

MUSHROOM VENT CAP

PART #	SIZE	LIST PRICE
21174	3/4"	---
21175	1"	---
21176	1-1/2"	---
21177	1-1/2"	---
21178	2"	---
21179	3"	---
21180	4"	---

Cast Iron Galvanized Threaded Cap. 30 Mesh screen. Protects against driving rain, snow, sleet and insects.

DOUBLE TAPPED BUSHINGS

PART #	SIZE	
65518DT	1-1/4" x 1"	
65522DT	1-1/2" x 3/4"	
65523DT	1-1/2" x 1"	
65527DT	2" x 1/2"	
65528DT	2" x 3/4"	
65529DT	2" x 1"	
65530DT	2" x 1¼"	
65531DT	2" x 1-1/2"	
65541DT	4" x 2"	
65543DT	4" x 3"	

WARNING: This product can expose you to chemicals, including lead, which are known to the State of California to cause cancer and birth defects or other reproductive harm. For more information, visit www.P65Warnings.ca.gov

STEEL FITTINGS

This will certify that the material was manufactured in accordance with ASME B16.14 - 1991 Standards. All Threads are Dryseal (NPTF) - 3/4 inch taper per foot and are made of Carbon Steel 12L14. Pressure rating: 150/300 PSI

• Clear Zinc plating specifications ASTM B633-07 • Federal Specification QQ-Z-325 (Zinc Plate)
• Type III with supplemental clear Trivalent chromate • .00015" Zinc (Minimum) • ROHS Compliant • Lead Free

HEX BUSHINGS

PART # ZINC	LIST PRICE	SIZE M X F	A	HEX	APPROX. WT. LBS.	PART # BLACK	LIST PRICE
66500	---	1/4″ x 1/8″	0.63	0.62	0.02	67500	---
66501	---	3/8″ x 1/8″	0.66	0.68	0.04	67501	---
66502	---	3/8″ x 1/4″	0.66	0.68	0.02	67502	---
66503	---	1/2″ x 1/8″	0.80	0.87	0.10	67503	---
66504	---	1/2″ x 1/4″	0.80	0.87	0.08	67504	---
66505	---	1/2″ x 3/8″	0.80	0.87	0.06	67505	---
66506	---	3/4″ x 1/8″	0.94	1.06	0.18	67506	---
66507	---	3/4″ x 1/4″	0.94	1.06	0.14	67507	---
66508	---	3/4″ x 3/8″	0.94	1.06	0.14	67508	---
66509	---	3/4″ x 1/2″	0.94	1.06	0.10	67509	---
66510	---	1″ x 1/4″	1.00	1.31	0.16	67510	---
66511	---	1″ x 3/8″	1.00	1.31	0.26	67511	---
66512	---	1″ x 1/2″	1.00	1.31	0.22	67512	---
66513	---	1″ x 3/4″	1.00	1.31	0.14	67513	---

FACE BUSHING

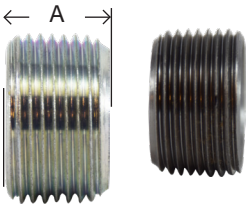

PART # ZINC	LIST PRICE	SIZE M X F	A	APPROX. WT. LBS.	PART # BLACK	LIST PRICE
	---	1/4″ x 1/8″	0.44	0.01	67700	---
	---	1/2″ x 1/4″	0.56	0.04	67704	---
	---	1/2″ x 3/8″	0.56	0.04	67705	---
	---	3/4″ x 1/2″	0.62	0.10	67709	---
66713	---	1″ x 3/4″	0.75	0.16	67713	---

CAPS

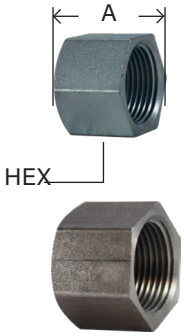

PART # ZINC	LIST PRICE	SIZE NPTF	A	HEX	APPROX. WT. LBS.	PART # BLACK	LIST PRICE
66470	---	1/8″	0.53	0.56	0.02	67470	---
66471	---	1/4″	0.63	0.62	0.04	67471	---
66472	---	3/8″	0.69	0.81	0.06	67472	---
66473	---	1/2″	0.87	1.00	0.12	67473	---
66474	---	3/4″	0.97	1.18	0.16	67474	---
	---	1″	1.16	1.50	0.30	67475	---
	---	1-1/4"	1.28	2.00	0.68	67476	---
	---	1-1/2"	1.35	2.25	0.83	67477	---

WARNING: This product can expose you to chemicals, including lead, which are known to the State of California to cause cancer and birth defects or other reproductive harm. For more information, visit www.P65Warnings.ca.gov

STEEL FITTINGS

PLUMBING

This will certify that the plugs are dimensional per SAE J531 MAY 95 Standards. All threads are Dryseal (NPTF) - 3/4"Taper per foot and are made of SAE J403 Low Carbon Steel 1010 Cold headed.

SQUARE HEAD PLUGS

• SOLID

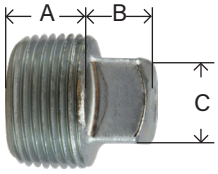

PART # ZINC	LIST PRICE	SIZE NPTF	A	B	C	APPROX. WT. LBS.	PART # BLACK	LIST PRICE
66670	---	1/8″	0.33	0.24	0.28	0.01	67670	---
66671	---	1/4″	0.45	0.28	0.37	0.02	67671	---
66672	---	3/8″	0.50	0.31	0.43	0.04	67672	---
66653	---	1/2″	0.59	0.38	0.55	0.12	67653	---
66654	---	3/4″	0.63	0.44	0.62	0.18	67654	---
66655	---	1"	0.75	0.5	0.81	0.34	67655	---
66656	---	1-1/4"	0.80	0.56	0.93	0.62	67656	---
66657	---	1-1/2"	0.83	0.62	1.12	0.82	67657	---
66658	---	2"	0.88	0.68	1.31	1.36	67658	---

HEX HEAD PLUGS

• SOLID

HEX

PART # ZINC	LIST PRICE	SIZE NPTF	A	HEX	APPROX. WT. LBS.	PART # BLACK	LIST PRICE
66770	---	1/8″	0.55	0.43	0.01	67770	---
66771	---	1/4″	0.74	0.56	0.04	67771	---
66772	---	3/8″	0.67	0.68	0.06	67772	---
66773	---	1/2″	0.80	0.70	0.12	67773	---
66774	---	3/4″	0.94	1.06	0.18	67774	---
66775	---	1″	1.00	1.31	0.22	67775	---
66776	---	1-1/4"	1.17	1.75	0.7	67776	---
	---	1-1/2"	1.51	2.00	1.2	67777	---
66778	---	2"	1.65	2.50	2.06	67778	---

COUNTERSUNK PLUG - SQUARE SOCKET

PART # ZINC	LIST PRICE	SIZE NPTF	A	SOCKET SIZE	APPROX. WT. LBS.	PART # BLACK	LIST PRICE
66630	---	1/8″	0.29	0.19	0.01	67630	---
66631	---	1/4″	0.45	0.25	0.02	67631	---
	---	3/8″	0.45	0.31	0.04	67632	---
66633	---	1/2″	0.59	0.38	0.08	67633	---
66634	---	3/4″	0.60	0.50	0.12	67634	---
66635	---	1″	0.75	0.50	0.16	67635	---
66636	---	1-1/4"	0.80	0.75	0.32	67636	---
66637	---	1-1/2"	0.83	0.75	0.45	67637	---
	---	2"	0.88	0.875	2.06	67638	---

COUNTERSUNK PLUG - HEX SOCKET

PART # ZINC	LIST PRICE	SIZE NPTF	A	SOCKET SIZE	APPROX. WT. LBS.	PART # BLACK	LIST PRICE
66760	---	1/16″	0.29	0.15	0.01	67760	---
66761	---	1/8″	0.29	0.18	0.01	67761	---
66762	---	1/4″	0.44	0.25	0.02	67762	---
66763	---	3/8″	0.44	0.31	0.04	67763	---
66764	---	1/2″	0.59	0.37	0.08	67764	---
66765	---	3/4″	0.60	0.56	0.14	67765	---
66766	---	1″	0.75	0.625	0.22	67766	---
66767	---	1-1/4"	0.80	0.75	0.37	67767	---
66768	---	1-1/2"	0.83	1.0	0.45	67768	---
	---	2"	0.88	1.0	0.86	67769	---

• SLOTTED AND FLUSH PLUGS AVAILABLE UPON REQUEST

WARNING: This product can expose you to chemicals, including lead, which are known to the State of California to cause cancer and birth defects or other reproductive harm. For more information, visit www.P65Warnings.ca.gov

STEEL MAGNETIC PLUGS

STEEL MAGNETIC DRAIN PLUGS - NPT THREADED

Magnetic Drain Plugs are similar to standard pipe or straight thread drain plugs with one important difference - a permanent magnet is fastened to the plug body. This magnet attracts and holds abrasive, ferrous metal particles preventing their circulation through the lubrication or hydraulic system.

These abrasive, ferrous metal particles appear in lubricating or hydraulic systems as a result of the following conditions:
- The constant flaking effect of normal wear of moving parts.
- Particles not removed by flushing operations after boring or machining.
- Chipping due to sub-surface casting flaws.
- Minute component breakdown caused by stress usage.

Magnetic Drain Plugs prevent excessive wear to the system's components.

Magnetic Plugs are used by numerous manufacturers of gear boxes, transmissions, engines, and hydraulic systems for the automotive, aircraft, agricultural and machinery industries.
Typical applications include:
- Outboard Engines
- Earthmoving Equipment
- Combines
- Balers
- Crawler Tractors
- Lift Trucks
- Mining Equipment
- Military Vehicles
- Turbine Engines
- Truck Axles
- Heavy-Duty Transmissions

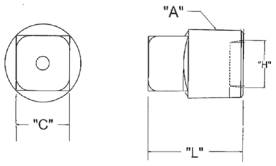

PART	SIZE "A"	HEAD WIDTH "C"	RECESS DIA. "H"	O/L LENGTH "L"	LIST PRICE
28996	3/8 - 18	.428 - .440	.435 - .445	.805 - .860	---
28997	1/2 - 14	.553 - 565	.560 - .570	.970 -1.04	---
28998	3/4 - 14	.615 - .627	.725 - .735	1.120 - 1.170	---
28999	1-11 1/2	.803 - 815	.895 - .905	1.25 - 1.33	---

WARNING: This product can expose you to chemicals, including lead, which are known to the State of California to cause cancer and birth defects or other reproductive harm. For more information, visit www.P65Warnings.ca.gov

BULL PLUGS AND SWAGES

STANDARD BULL PLUG

- SCH 40 150#
- ZINC PLATED

PART #	DESCRIPTION	LIST PRICE
91008	2"	---
	2" w/ 1/2" TAP	---
	2-1/2"	---
	3"	---
91011	4"	---

XH BULL PLUG

- MADE FROM SCH. 80 PIPE.
- ZINC PLATED
- HOLLOW

PART #	DESCRIPTION	LIST PRICE
	1/4"	---
90005	1"	---
	1-1/4"	---
	1-1/2"	---
90008	2"	---
90212	2" w/ 1/2" TAP	---
93212*	2"XXH w/1/2" TAP	---
	2-1/2"	---
90010	3"	---
90215	3" w/ 1/2" TAP	---
90011	4"	---

* XXH

STANDARD SCH. 40 SWAGE MIP X MIP

- ZINC PLATED

PART #	DESCRIPTION	LIST PRICE
93113	1-1/4" x 1"	---
93121	2" x 1"	---
93123	2" x 1-1/2"	---
	2-1/2" x 2"	---
93124	3" x 1"	---
93127	3" x 1-1/2"	---
93128	3" x 2"	---
	3" x 2-1/2"	---
93130	4" x 2"	---
93131	4" x 3"	---
93139	6" x 3"	---

WARNING: This product can expose you to chemicals, including lead, which are known to the State of California to cause cancer and birth defects or other reproductive harm. For more information, visit www.P65Warnings.ca.gov

SWAGES
PLUMBING

SCH 80 XH SWAGES
MIP X MIP

* HEX STYLE

PART #	DESCRIPTION	LIST PRICE
	1/4" x 1/8"	---
90102	1/2" x 1/4"	---
90103*	1/2" x 3/8"	---
90104*	3/8" x 1/4"	---
90105*	3/4" x 1/4"	---
90106*	3/4" x 3/8"	---
90107*	3/4" x 1/2"	---
	1" x 1/4"	---
	1" x 3/8"	---
90110*	1" x 1/2"	---
90111*	1" x 3/4"	---
90140	1-1/4" x 3/4"	---
90141	1-1/4" x 1"	---
90114	1-1/2" x 1/2"	---
90115	1-1/2" x 3/4"	---
90116	1-1/2" x 1"	---
90117	1-1/2" x 1-1/4"	---
	2" x 1/4"	---
90119	2" x 1/2"	---
90120	2" x 3/4"	---
90121	2" x 1"	---
90122	2" x 1-1/4"	---
90123	2" x 1-1/2"	---
90124	2-1/2" x 2"	---
	3" x 1"	---
90128	3" x 2"	---
	3" x 2-1/2"	---
	4" x 1"	---
90130	4" x 2"	---
90131	4" x 3"	---
90132	6" x 4"	---
	6" x 2"	---
90150	6" x 3"	---

XXH SWAGE

PART #	DESCRIPTION	LIST PRICE
	1/2" x 1/4"	---
92107	3/4" x 1/2"	---
	1" x 1/4"	---
	1" x 3/8"	---
	1" x 3/4"	---
	1-1/2" x 1/2"	---
	1-1/2" x 3/4"	---
92116	1-1/2" x 1"	---
	2" x 1/2"	---
	2" x 3/4"	---
92121	2" x 1"	---
	2" x 1-1/4"	---
	2" x 1-1/2"	---
92128	3" x 2"	---

WARNING: This product can expose you to chemicals, including lead, which are known to the State of California to cause cancer and birth defects or other reproductive harm. For more information, visit www.P65Warnings.ca.gov

LEAD FREE

LEAD FREE VALVES

LEAD FREE BALL VALVES

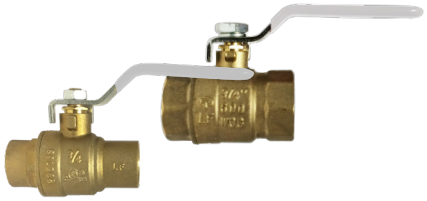

PRESS VALVES

PEX VALVES

PUSH FIT VALVES

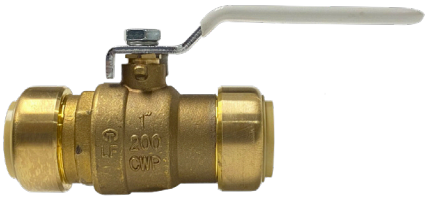

SILCOCK

GATE VALVES

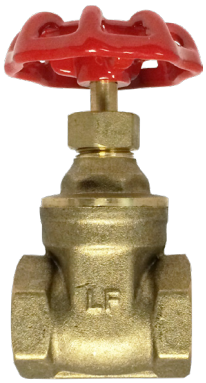

CHECK

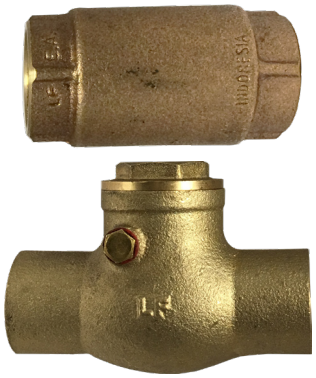

BOILDER DRAIN

WARNING: This product can expose you to chemicals, including lead, which are known to the State of California to cause cancer and birth defects or other reproductive harm. For more information, visit www.P65Warnings.ca.gov

LEAD FREE BALL VALVE

5 PSIG
C US

LEAD FREE

IAMPO IGC 157 - 2004b

Lead Free Brass Ball Valve NPT,Female*Female
Lead Free and dezincification resistant (DZR) material
IAPMO listed to NSF/ANSI-61, NSF/ANSI-372 ,IGC-157
CSA listed to NSF/ANSI-61, NSF/ANSI-372 ,IGC-157
Vacuum Services 29.92 inches Hg
600 psi (WOG) 150 psi (WSP) Service
Thread conform ANSI B1.20.1
Temperature Range : -40° F to 365° F
Construction:Forging Brass Body
PTFE Ball Seats
Blow Out Proof Brass Stem
Stainless Steel Ball
Steel Handle w/Vinyl Grip
Made in China

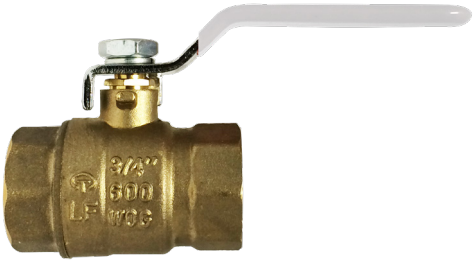

FIP X FIP LEAD FREE BALL VALVE

PART #	SIZE	DN	A	B	C	E	F	G	H	WEIGHT	BOX/CASE	LIST PRICE
941151LF	1/4"	0.394	1.73	1.69	3.35	0.453	0.945	2.154	4.331	0.32	10/120	---
941152LF	3/8"	0.394	1.73	1.69	3.35	0.473	0.945	2.154	4.331	0.32	10/120	---
941153LF	1/2"	0.524	1.89	1.73	3.35	0.472	1.083	2.276	4.291	0.36	10/100	---
941154LF	3/4"	0.748	2.28	1.89	3.35	0.563	1.378	2.579	4.488	0.57	10/80	---
941155LF	1"	0.984	2.80	2.14	4.29	0.650	1.772	3.031	5.689	0.94	8/48	---
941156LF	1-1/4"	1.240	3.15	2.32	4.29	0.669	2.165	3.398	5.866	1.30	4/36	---
941157LF	1-1/2"	1.476	3.44	2.66	5.53	0.701	2.50	3.909	7.343	1.92	2/24	---
941158LF	2"	1.949	4.06	3.01	5.53	0.708	3.244	4.638	7.638	3.12	2/12	---
941159LF	2-1/2"	2.52	5.53	4.25	7.76					7.42	2/12	---
941160LF	3"	2.89	6.14	4.58	8.19					11.01	1/6	---
941161LF	4"	3.84	7.79	5.49	9.25					12.10	1/2	---

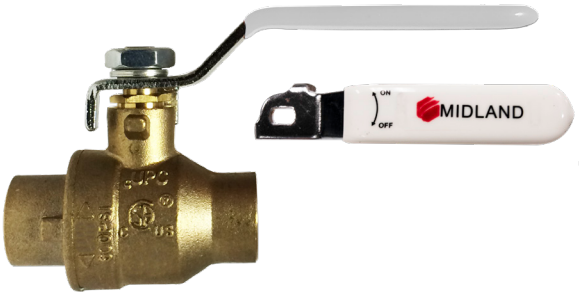

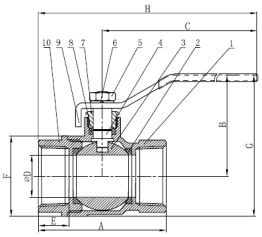

NO	ITEM	QTY	MATERIAL
1	Body	1	Lead Free Brass
2	Seat	2	PTFE
3	Ball	1	Stainless Steel
4	Stem	1	Brass
5	Handle Nut	1	Plated Steel
6	Lock Washer	1	Plated Steel
7	Packing Nut	1	Brass
8	Packing	1	PTFE
9	Handle	1	Plated Steel
10	Cap	1	Lead Free Brass

SWT X SWT LEAD FREE BALL VALVE

PART #	SIZE	DN	A	B	C	E	G	H	WEIGHT	WTG	BOX/CASE	LIST PRICE
941163LF	1/2"	0.524	1.945	1.73	3.35	0.504	1.083	2.276	4.319	0.38	10/100	---
941164LF	3/4"	0.748	2.654	1.89	3.35	0.748	1.378	2.579	4.665	0.65	10/80	---
941165LF	1"	0.984	3.315	2.14	4.29	0.909	1.772	3.031	5.949	0.93	8/48	---
941166LF	1-1/4"	1.240	3.741	2.32	4.29	0.968	2.165	3.398	6.165	1.35	4/36	---
941167LF	1-1/2"	1.476	4.252	2.66	5.63	1.091	2.50	3.909	7.756	1.88	2/24	---
941168LF	2"	1.949	5.38	3.01	5.63	1.343	3.244	4.638	8.268	3.62	2/12	---
941169LF	2½"	2.52	5.53	4.25	7.76							
941170LF	3"	2.89	6.14	4.58	8.19							
941171LF	4"	3.84	7.79	5.49	9.25							

WARNING: This product can expose you to chemicals, including lead, which are known to the State of California to cause cancer and birth defects or other reproductive harm. For more information, visit www.P65Warnings.ca.gov

LF BALL VALVE WITH DRAIN

PLUMBING

FULL PORT LF IPS BRASS BALL VALVE WITH DRAIN

PART #	FEMALE PIPE X FEMALE PIPE	LIST PRICE
941153LFD	1/2″	
941154LFD	3/4″	
941155LFD	1″	

BALL VALVE WITH DRAIN

- Lead Free Brass
- Full Port
- 600 Wog

PART #	SWEAT X SWEAT	LIST PRICE
941163LFD	1/2″	
941164LFD	3/4″	
941165LFD	1″	

BALL VALVE W/ STAINLESS STEEL TEE HANDLE

PART #	FEMALE PIPE X FEMALE PIPE	LIST PRICE
940173TSSLF	1/2″	
940174TSSLF	3/4″	
940175TSSLF	1"	

WARNING: This product can expose you to chemicals, including lead, which are known to the State of California to cause cancer and birth defects or other reproductive harm. For more information, visit www.P65Warnings.ca.gov

LEAD FREE

LEAD FREE BALL VALVE

C US UL842, UL258, UL125,FM

▪ BRASS ▪ 600PSI ▪ FULL PORT W/APPROVALS

CSA, UL, FM(1/4"-2"), CUPC, NSF/ ANSI 61 & 372

FEATURES 1/2" - 2" Sizes Gas Approved
- Leadfree Brass Ball valve NPT, Female * Female
- Lead free and dezincification resistant (DZR) material
- 1/4"-1" Lead Free Brass Ball
- Size 1-1/4" thru 4" with Stainless steel ball
- IAMPO listed to cUPC, NSF/ ANSI 61 & 372, IGC 157
- CSA - 1/4" thru 2": ANSI Z21.15/ CSA 9.1 for 1/2 psig valves ASME B16.44, CGA CR91-002 fzor 2 & 5 psig valves; CAN/ CGA-3.16, ASME B16.33 (1/2"-2") for 125 psig valves
- UL 125, UL 1477, UL 842 - for size 1/4" thru 4", 250 psig
- UL 258 - for size 1/4" thru 2", 175 psig
- FM - for size 1/4" thru 2"
- ISO 9002 Manufacture
- Suitable for full range of liquids and gases
- Minimal pressure drop due to large full size ports
- Bottom loaded, pressure retaining stem
- Pressure rated for 1/4"-2" at 600psi (42 bars) and 2-1/2"-4" at 400 psi WOG (non-shock) and 150 WSP (10.34 bars) saturated steam. Virgin PTFE stem packing seal, thrust washer and seats
- White vinyl insulator on heavy duty plated carbon steel handles

- Fast 1/4 turn open or close operation
- Low operating torque
- **Adjustable stem packing gland**
- Maximum operating temperature: 302^{0}F (150^0 C)
- Minimum operating temperature: -22^{0}F (-30^{0}C)
- Each valve individually tested
- Forged Brass - for more strength
- Threaded ends to ANSI B1.20.1
- Hard chromium plated solid ball
- Bottom entry, blow-out proof stem
- Deeper threads - for better connections
- Made in China

POS	COMPONENTS	MATERIALS
1	Body	Lead Free Brass
2	End Cap	Lead Free Brass
3	Ball Seat	PTFE
4	Ball	1/4-1:Lead Free Brass 1 1/4-4:SS316 Hollowball
5	Stem	Brass
6	Stem Padding	PTFE
7	Padding Nut	Brass
8	Lever Handle	Nickel plating steel
9	Stem Nut	Brass plating steel
10	Seal	PTFE

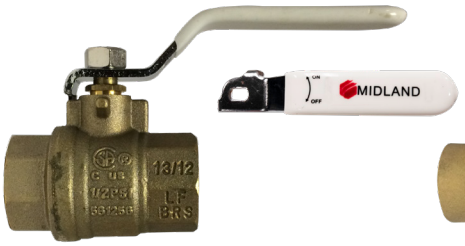

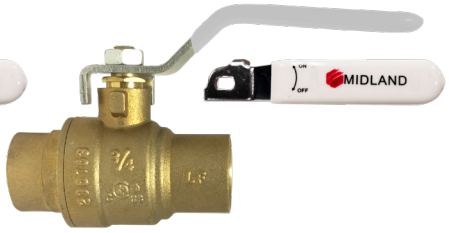

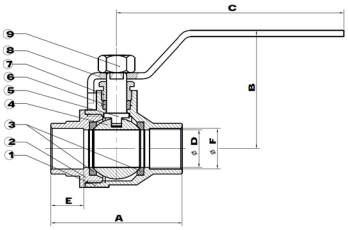

PART#	SIZE	DIMENSIONS A	B	C	D	E	F	G	H	WEIGHT	BOX/ CASE	LIST PRICE
940171LF	1/4"	1.756	1.732	3.543	0.394	0.457	1.012	2.238	4.421	0.34	70/140	---
940172LF	3/8"	1.756	1.732	3.543	0.394	0.457	1.012	2.238	4.421	0.34	70/140	---
940173LF	1/2"	2.047	2.040	3.543	0.583	0.520	1.240	2.559	4.567	0.45	50/100	---
940174LF	3/4"	2.362	2.260	3.780	0.748	0.563	1.492	2.854	4.961	0.69	30/60	---
940175LF	1"	2.756	2.579	4.528	0.945	0.630	1.791	3.476	5.906	1.11	20/40	---
940176LF	1-1/4"	3.307	3.050	4.528	1.260	0.709	2.343	4.134	6.181	1.85	12/24	---
940177LF	1-1/2"	3.661	3.366	5.420	1.575	0.717	2.835	4.783	7.343	2.60	9/18	---
940178LF	2"	4.181	3.701	5.42	1.969	0.748	3.425	5.413	7.602	3.62	6/12	---
940179LF	2-1/2"	4.181	4.650	8.870	2.520	1.024	4.331	6.969	11.350	7.93	3/6	---
940180LF	3"	6.039	4.970	8.870	2.913	1.102	4.921	7.579	11.681	10.40	1/4	---
940181LF	4"	7.386	6.130	10.85	3.898	1.220	6.430	9.055	13.299	20.99	1/2	---

SWT X SWT LEAD FREE BALL VALVE

FM, CUPC, NSF/ ANSI 61 & 372

PART #	SWT	A	B	C	D	E	F	WEIGHT	BOX/CASE	LIST PRICE
943612LF	1/2"	2.047	1.839	3.543	0.583	0.512	0.630	0.45	50/100	---
943613LF	3/4"	2.748	2.14	3.780	0.748	0.748	0.878	0.68	30/60	---
943614LF	1"	3.228	2.449	4.528	0.945	0.906	1.130	1.08	20/40	---
943615LF	1-1/4"	3.819	3.04	4.36	1.260	0.972	1.378	1.80	12/24	---
943616LF	1-1/2"	4.425	3.169	5.39	1.575	1.088	1.630	2.51	9/18	---
943617LF	2"	5.377	3.488	6.307	1.989	1.346	2.130	3.57	6/12	---

WARNING: This product can expose you to chemicals, including lead, which are known to the State of California to cause cancer and birth defects or other reproductive harm. For more information, visit www.P65Warnings.ca.gov

LEAD FREE

LEAD FREE BALL VALVES
PLUMBING

ITALIAN LEAD FREE BRASS BALL VALVE

5 PSIG C US

UL FM

UL842, UL258, UL125,FM

ISO 9002 Manufacturer
FEATURES

600 PSI non-shock cold water, gas, oil - 150 PSI saturated steam

CSA AGA 3.88 5 PSIG IAMPO IGC 157 - 2004b

- **SOLID CHROME PLATED BRASS BALL**
- Suitable for full range of liquids and gases
- Minimal pressure drop due to large full size ports
- Bottom loaded, pressure retaining stem
- Pressure rated at 600psi (42 bars) WOG (non-shock) and 150 WSP (10.34 bars) saturated steam. Virgin TFE stem packing seal, thrust washer and seats.
- Blue vinyl insulator on heavy duty plated carbon steel handles.
- Fast 1/4 turn open or close operation
- Low operating torque
- Flow can go both directions
- Adjustable stem packing gland
- Maximum operating temerature: 248^{0}F (120^0 C) at 600 PSI
- Minimum operating temperature: -20^{0}F (-40^{0}C)
- Each valve individually tested
- Forged Brass - for more strength
- Threaded ends to ANSI B1.20.1
- Hard chromium plated solid ball
- Bottom entry, blow-out proof stem
- Deeper threads - for better connections

MADE IN ITALY

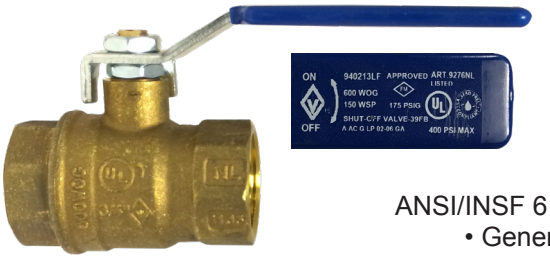

FIP X FIP

ANSI/INSF 61-8
- Generic Handles

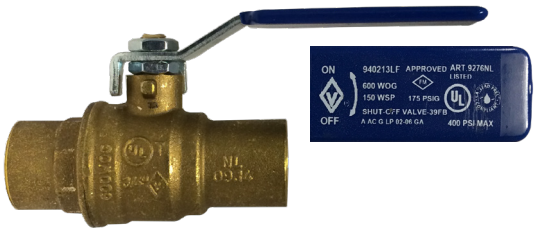

SWT X SWT

FIP X FIP LEAD FREE FORGED BRASS BALL VALVE

PART #	NPT	DN	A	B	C	D	CH	WEIGHT (LBS)	BOX/CASE	LIST PRICE
943233LF	1/2"	0.57	2.09	1.57	3.35	0.46	0.98	0.39	20/80	---
943234LF	3/4"	0.75	2.28	1.77	3.80	0.49	1.22	0.56	14/56	---
943235LF	1"	0.94	3.04	2.03	3.80	0.59	1.50	0.89	6/24	---
943236LF	1-1/4"	1.24	3.23	2.32	4.72	0.62	1.85	1.44	4/16	---
943237LF	1-1/2"	1.49	3.70	2.60	4.72	0.64	2.13	2.19	2/8	---
943-238LF	2"	1.96	4.13	3.27	6.38	0.65	2.64	3.62	1/4	---

SWT X SWT LEAD FREE FORGED BRASS BALL VALVE

PART #	SWT	Ø	DN	A	B	C	D	CH	WEIGHT (LBS)	BOX/CASE	LIST PRICE
940212LF	1/2"	0.63	0.57	2.40	1.57	3.35	0.42	0.79	0.35	20/80	---
940213LF	3/4"	0.866	0.75	3.26	1.77	3.80	0.61	1.06	0.55	10/40	---
940214LF	1"	1.102	0.94	3.68	2.03	3.80	0.73	1.34	0.87	6/24	---
940215LF	1-1/4"	1.377	1.24	4.23	2.32	4.72	0.91	1.61	1.41	6/24	---
940216LF	1-1/2"	1.61	1.49	4.96	2.60	4.72	1.06	1.89	2.08	2/8	---
940217LF	2"	2.125	1.96	5.86	3.27	6.38	1.26	2.40	3.62	1/4	---

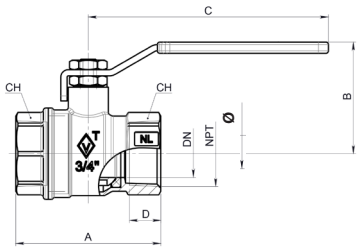

POS	COMPONENTS	MATERIALS
1	Body	CW510L
2	End Connection	CW510L
3	Ball Seal	PTFE
4	Seal	CW510L
5	Stem	CW614N
6	Lower Stem	PTFE
7	O-Ring	NBR70sh
8	Upper Seal	PTFE
9	Brass Ring	CW614N
10	Nut	Steel
11	Handle	Steel P10

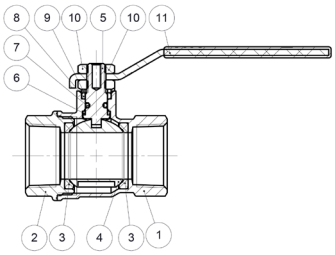

WARNING: This product can expose you to chemicals, including lead, which are known to the State of California to cause cancer and birth defects or other reproductive harm. For more information, visit www.P65Warnings.ca.gov

LEAD FREE COPPER PRESS BALL VALVE

Midland Series “9404LF” 2-Piece, Full Port, Lead Free, Copper, Press Ball Valves are designed for use in flameless, copper press piping systems. Midland Copper Press Ball Valves feature a lead free brass body, adjustable packing gland and blowout proof stem with stem a single O-ring seal. Our press ball valves come with integral ASTM-B88 compliant press end connections that can be used with type K, L, M, hard copper tubing 1/2 in. – 4 in. Utilizing industry standard tools.

Midland Press Ball Valve Features

- Lead Free construction.
- Available Sizes: 1/2 in. – 4 in.
- Integral press end connections designed for hard and soft copper tubing
- ISO-9001
- 250 WOG - 250 CWP (2-1/2" - 4")
- Full Port Stainless Steel ball
- One O-Ring design
- Blow Out Proof Stem
- UPC & NSF-61 Compliant
- AB1953 & NSF-372 Compliant•

Midland Copper Press Ball Valves are a heat-free method for joining copper tubes. Our press valve allows installers the confidence to know the joint is secure due to our leak-detection o-ring. During low pressure testing, if the joint is not pressed properly, the specialized o-ring will leak. This allows the installer to correct the press before the system is operational at higher pressures.

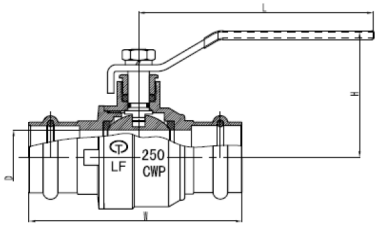

1/2″–2″

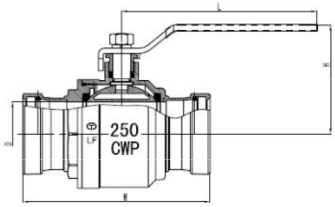

2 1/2″–4″

PART NAME	MATERIAL
Body	Lead Free Brass
Seat	PTFE
Ball	Stainless Steel
Stem O-Ring	NBR
Packing Nut	Brass
Stem	Brass (1/2"-2")
	Stainless Steel(2-1/2"-4")
Lock Nut	Ferrum /Zinc Plated
Lock Washer	Ferrum /Zinc Plated
Packing	PTFE
Handle	Ferrum /Chrome Plated
Cap	Lead Free Brass
Body O-Ring	NBR
Press O-Ring	EPDM

PART #	SIZE	D	L	H	W	CV	
940403LF	1/2"	0.591	3.46	1.81	3.15	18.55	---
940404LF	3/4"	0.748	4.29	2.09	3.60	29.76	---
940405LF	1"	0.984	4.29	2.25	3.92	51.55	---
940406LF	1-1/4"	1.259	5.63	2.52	4.41	84.42	---
940407LF	1 1/2"	1.574	5.63	2.74	5.35	131.93	---
940408LF	2 "	1.941	5.63	3.03	6.79	200.35	---
940409LF	2 1/2"	2.520	7.76	4.25	7.46	338.43	---
940410LF	3 "	2.874	8.19	4.58	8.17	445.44	---
940411LF	4"	3.839	9.25	5.49	9.88	783.88	---

WARNING: This product can expose you to chemicals, including lead, which are known to the State of California to cause cancer and birth defects or other reproductive harm. For more information, visit www.P65Warnings.ca.gov

C/E PEX & PEX BALL VALVES LEAD FREE

LEAD FREE

CUPC, AB 1953, NSF/ANSI 61, NSF/ ANSI 372 (ANNEX G) NSF-14

- 400 WOG
- FORGED LEAD FREE BRASS BODY
- SS BALL

UNION PEX VALVE
C/E PEX X C/E PEX

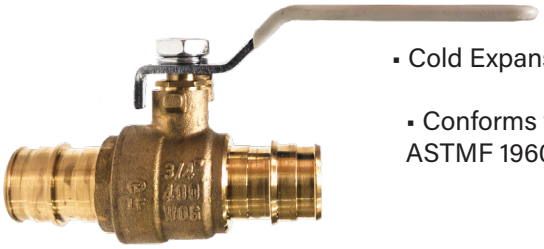

- Cold Expansion
- Conforms to ASTMF 1960

PART #	SIZE	
945611LF	1/2"	---
945612LF	3/4"	---
945613LF	1"	---
945614LF	1-1/4"	---
945615LF	1 1/2"	---
945616LF	2 "	---

PEX VALVE WITH DROP EAR AND DRAIN
C/E PEX X C/E PEX
WITH DRAIN AND DROP EAR

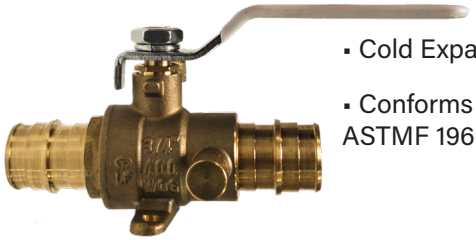

- Cold Expansion
- Conforms to ASTMF 1960

PART #	SIZE	
945621LF	1/2"	---
945622LF	3/4"	---
945623LF	1"	---

MALE ADAPTER PEX VALVE
MALE PIPE X C/E PEX

- Cold Expansion
- Conforms to ASTMF 1960
- Thread conforms to ANSI B1.20.1

PART #	SIZE	
945631LF	1/2"	---
945632LF	3/4"	---
945633LF	1"	---

PEX X PEX
PEX ENDS CONFORM TO ASTMF-1807

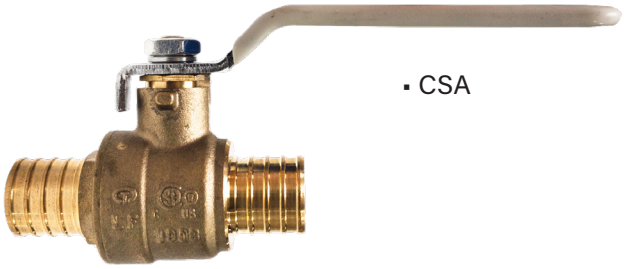

- CSA

PART #	SIZE	
945601LF	1/2"	---
945602LF	3/4"	---
945603LF	1"	---
945604LF	1-1/4"	---
945605LF	1-1/2"	---
945606LF	2"	---

W/TEE HANDLE

PART #	SIZE	
945640LF	3/4"	---

PEX DRAIN VALVE

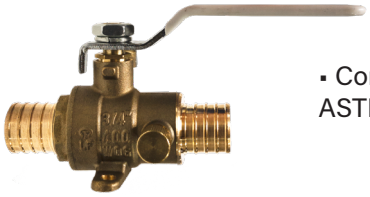

- Conforms to ASTMF 1807

PART #	SIZE	
945650LF	1/2"	---
945651LF	3/4"	---
945652LF	1"	---

PEX x FEMALE PIPE

PART #	SIZE	LIST PRICE
973635LF	1/2″	
973636LF	3/4″	
973637LF	1″	

- Dezincification resistant (D2B) Lead Free Brass material
- Cold expansion pex ends conform to ASTM F1960
- Blow out proof stem design

WARNING: This product can expose you to chemicals, including lead, which are known to the State of California to cause cancer and birth defects or other reproductive harm. For more information, visit www.P65Warnings.ca.gov

LEAD FREE

LEAD FREE, FULL PORT BRASS BALL VALVES PUSH-FITTING END

FEATURES

- dezincification resistant (DZR) Lead Free Brass Material
- Push-fiting conform ASSE 1061
- Forged Brass Body
- BLow Out Proof Stem Design
- Packing Nut & Packing On the Steam Seal
- Stainless Steel Ball
- Handle with Vinyl Grip
-
- PERFORMANCE RATING
- 200 psi (CWP) 150 psi (WSP) Service
- Temperature Range: -20° F to 300° F

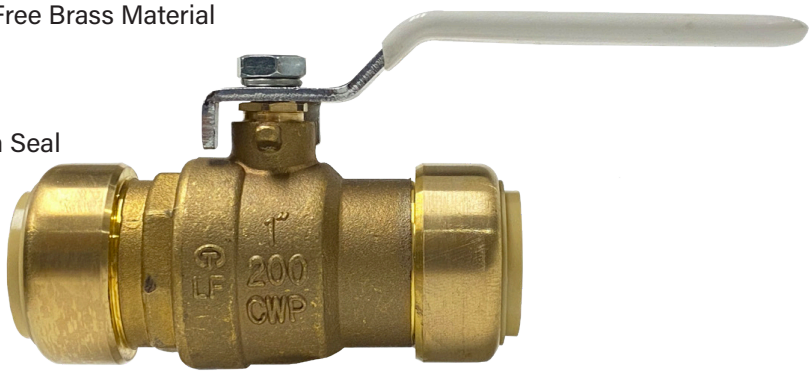

PUSH FIT VALVES

PART NO.	SIZE	DN	L	L1	L2	H	CV	WT(LBS.)	LIST
943750LF	1/2"	0.524	3.15	0.91	3.46	1.73	14.56		
943751LF	3/4"	0.748	3.55	1.10	3.46	1.89	29.76		
943752LF	1"	0.984	4.14	1.32	4.29	2.14	51.55		

PART NAME	MATERIAL
Body	Lead Free Brass
Seat	PTFE
Ball	Stainless Steel
Packing Nut	Brass
Stem	Brass
Lock Nut	Ferrum/Zinc Plated
Lock Washer	Ferrum/Zinc Plated
Packing	Ptfe
Handle	Ferrum/Chrome Plated
Cap	Lead Free Brass
O-Ring	EPDM
Seat Ring	POM
Gripper Ring	Stainless Steel
Push Ring	POM
Lock Ring	POM
Liner	PSF

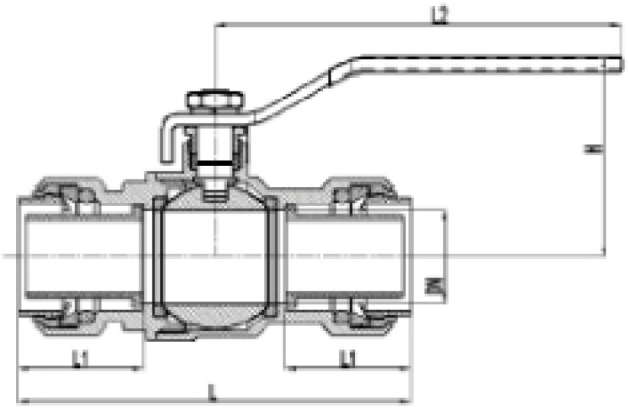

WARNING: This product can expose you to chemicals, including lead, which are known to the State of California to cause cancer and birth defects or other reproductive harm. For more information, visit www.P65Warnings.ca.gov

LEAD FREE GATE/ CHECK/ Y VALVES

PLUMBING

BRASS GATE VALVE IPS

•200 WOG (Cold water, oil, gas)
•125 WSP (Saturated Steam)
• Brass Forged body/bonList- stronger than sand castings.
• Superior quality and finish.
• Each valve individually tested.
• Threaded ends to ANSI B1.20.1, Solder ends to ANSI B16.18
• Non rising stem.
• Cast iron handle.
• NSF Approved

BRASS GATE VALVE IPS

PART#	SIZE	LIST PRICE
940130LF	1/4	---
940131LF	3/8	---
940132LF	1/2	---
940133LF	3/4	---
940134LF	1	---
940135LF	1-1/4	---
940136LF	1-1/2	---
940137LF	2	---
940138LF	2-1/2	
940139LF	3	
940140LF	4	

BRASS GATE VALVE C X C

PART#	SIZE	LIST PRICE
940142LF	1/2"	---
940143LF	3/4"	---
940144LF	1"	---
940147LF	2"	---

BRASS CHECK VALVE

NO	PART	MATERIAL
1	Cap	C37700
2	Gasket	NBR
3	Spring	Stainless Steel
4	Positioning Seat	BRASS
5	Screw	BRASS
6	Body	C37700

• NSF Approved
• ANSI 61-4

LEAD-FREE

PART #	SIZE	LIST PRICE
944430LF	1/2	---
944431LF	3/4	---
944432LF	1	---
944433LF	1-1/4	---
944434LF	1-1/2	---
944435LF	2	---

CAST BRASS SWING CHECK VALVE IPS SCREWED ENDS

• Working pressure non-shock: 200 psi W.O.G. (cold water, oil, gas) 125 psi WSP (saturated steam)
• Swing type disc.
• Screwed Cap.
• Hard Seat.
• 90⁰ Straight Pattern.
• Used to prevent reverse flow in commercial and industrial applications.
• Threaded ends to ANSI B1.20.1. Solder ends ANSI 61-8
• Integral seat.
• NSF Approved

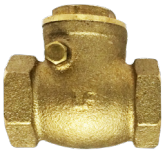

PART #	SIZE	LIST PRICE
940352LF	1/2"	---
940353LF	3/4"	---
940354LF	1"	---
940355LF	1-1/4"	---
940356LF	1-1/2"	---
940357LF	2"	---
940358LF	2½"	
940359LF	3"	
940360LF	4"	

C X C SWING CHECK VALVE

PART #	SIZE	LIST PRICE
940362LF	1/2	---
940363LF	3/4	---
940364LF	1	---
940365LF	1-1/4	---
940366LF	1-1/2	---
940367LF	2	---

CLASS 150 BRASS Y-PATTERN STRAINER

LEAD-FREE

PART#	SIZE	LIST PRICE
940523LF	1/2"	---

WARNING: This product can expose you to chemicals, including lead, which are known to the State of California to cause cancer and birth defects or other reproductive harm. For more information, visit www.P65Warnings.ca.gov

LOW PRESSURE LF BRASS VALVES

PLUMBING

LF BRASS FROST FREE SILLCOCK VALVES/ ANTI SIPHON

PART#	SIZE 1/2"MIP & 1/2"SWEAT X 3/4"MHT X	D	H	L	
942150LF	6"	2.20	8.64	3.07	
942151LF	8"	2.20	12.66	3.07	
942152LF	12"	2.20	16.71	3.07	

NO	PARTS	MATERIALS	QTY	WATER CONTACT
1	Bolt	Forged Brass	1	N
2	Name Plate	Aluminium	1	N
3	Handle	Aluminium	1	N
4	Bonnet	Brass Rod	1	N
5	Washer	Stainless Steel	1	N
6	Packing	Rubber (NBR)	1	Y
7	Washer	Stainless Steel	1	Y
8	Pipe	Brass (Copper)	1	Y
9	Stem	Brass Rod	1	Y
10	Spring	Stainless Steel	1	Y
11	O-Ring	Rubber (NBR)	1	Y
12	Spring Seat	Brass Rod	1	Y
13	Flapper	Rubber (NBR)	1	Y
14	Seat	Forged Brass	1	Y
15	Seat Pack-ing	Rubber (NBR)	1	Y
16	Screw	Forged Brass	1	Y
17	Body	Cast Brass	1	Y
18	Pipe	Brass (Copper)	1	Y
19	Nipple	Brass Rod	1	Y
20	Packing	Pom M90	1	N
21	Floating	Pom M90	1	Y
22	Floating Pk	Rubber (NBR)	1	Y
23	O-Ring	Rubber (NBR)	1	Y
24	Packing	Pom M90	1	Y
25	Cap	Brass Rod	1	Y

WARNING: This product can expose you to chemicals, including lead, which are known to the State of California to cause cancer and birth defects or other reproductive harm. For more information, visit www.P65Warnings.ca.gov

LOW PRESSURE LF BRASS VALVES

PLUMBING

BRASS HOSE BIBB NO KINK VALVES HEAVY DUTY

NO	PARTS	MATERIALS	QTY	WATER CONTACT
1	Bolt	Hot Rolled	1	N
2	Handle	Zinc	1	N
3	Packing Nut	Brass Rod	1	N
4	Packing	Teflon Polyflon	1	Y
5	Bonnet	Brass Rod	1	Y
6	Packing	Nylon	1	Y
7	Stem	Brass Rod	1	Y
8	Seat Packing	Rubber (NBR)	1	Y
9	Screw	Forged Brass	1	Y
10	Body	Cast Brass	1	Y

PART#	NOMINAL SIZE	D	H	L	MIP	LIST
942110LF	1/2" MIP & 1/2" Sweat x 3/4" MHT	2.12	1.97	2.87	1/2"-14NPT	
942111LF	3/4" MIP x 3/4" MHT	2.12	1.97	2.97	3/4"-14NPT	

BRASS HOSE BIBB NO KINK VALVES HEAVY DUTY

NO	PARTS	MATERIALS	QTY	WATER CONTACT
1	Bolt	Hot Rolled	1	N
2	Handle	Zinc	1	N
3	Packing Nut	Brass Rod	1	N
4	Packing	Teflon Polyflon	1	Y
5	Bonnet	Brass Rod	1	Y
6	Packing	Nylon	1	Y
7	Stem	Brass Rod	1	Y
8	Seat Packing	Rubber (NBR)	1	Y
9	Screw	Forged Brass	1	Y
10	Body	Cast Brass	1	Y

PART#	NOMINAL SIZE	D	H	L	MIP
942112LF	1/2" FIP x 3/4" MHT	2.12	1.97	2.87	1/2"-14NPT
942113LF	3/4" FIP x 3/4" MHT	2.12	1.97	2.97	3/4"-14NPT

BRASS HOSE BIBB NO KINK VALVES HEAVY DUTY

NO	PARTS	MATERIALS	QTY	WATER CONTACT
1	Bolt	Hot Rolled	1	N
2	Handle	Zinc	1	N
3	Packing Nut	Brass Rod	1	N
4	Packing	Teflon Polyflon	1	Y
5	Bonnet	Brass Rod	1	Y
6	Packing	Nylon	1	Y
7	Stem	Brass Rod	1	Y
8	Seat Packing	Rubber (NBR)	1	Y
9	Screw	Forged Brass	1	Y
10	Body	Cast Brass	1	Y

PART#	NOMINAL SIZE	D	H	L
942123LF	3/4" FTG & 1/2" SWEAT x 3/4" MHT	2.12	1.97	2.87

WARNING: This product can expose you to chemicals, including lead, which are known to the State of California to cause cancer and birth defects or other reproductive harm. For more information, visit www.P65Warnings.ca.gov

LEAD FREE

LEAD FREE VALVES

LF BRASS BOILER DRAIN

PART#	NOMINAL SIZE	D	H	L	FIP	
942164LF	1/2" FIP x 3/4" MHT	2.08	3.35	1.46	1/2"-14NPT	
942165LF	3/4" FIP x 3/4" MHT	2.08	3.35	1.46	3/4"-14NPT	

NO	PARTS	MATERIALS	QTY	WATER CONTACT
1	Bolt	Hot Rolled	1	N
2	Name Plate	Aluminium	1	N
3	Handle	Zinc	1	N
4	Packing Nut	Brass Rod	1	N
5	Packing	Teflon Polyflon	1	Y
6	Bonnet	Brass Rod	1	Y
7	Packing	Nylon	1	Y
8	Stem	Brass Rod	1	Y
9	Seat Packing	Rubber (NBR)	1	Y
10	Screw	Forged Brass	1	Y
11	Body	Cast Brass	1	Y

LF BOILER DRAIN

PART#	NOMINAL SIZE	D	H	L	MIP	
942162LF	1/2"MIP & 1/2" SWEAT X 3/4" MHT	2.08	3.50	1.46	1/2"-14NPT	
942163LF	3/4" MIP x 3/4" MHT	2.08	3.58	1.46	3/4"-14NPT	

NO	PARTS	MATERIALS	QTY	WATER CONTACT
1	Nut	Hot Rolled	1	N
2	Name Plate	Aluminium	1	N
3	Handle	Cast Iron	1	N
4	Packing Nut	Brass Rod	1	N
5	Packing	Rubber (NBR)	1	Y
6	Bonnet	Cast Brass	1	Y
7	Stem	Cast Brass	1	Y
8	Seat Packing	Rubber (NBR)	1	Y
9	Screw	Forged Brass	1	Y
10	Body	Cast Brass	1	Y

LF BRASS BOILER DRAIN SPOUT- ANGLE

PART#	NOMINAL SIZE	D	H	L	MIP	
942134LF	1/2" MIP & 1/2" Sweat x 3/4" MHT	2.12	2.16	1.14	1/2"-14NPT	
942135LF	3/4" MIP x 3/4" MHT	2.12	2.16	1.14	3/4"-14NPT	

NO	PARTS	MATERIALS	QTY	WATER CONTACT
1	Nut	Hot Rolled	1	N
2	Name Plate	Aluminium	1	N
3	Handle	Cast Iron	1	N
4	Packing Nut	Brass Rod	1	N
5	Packing	Rubber (NBR)	1	Y
6	Bonnet	Cast Brass	1	Y
7	Stem	Cast Brass	1	Y
8	Seat Packing	Rubber (NBR)	1	Y
9	Screw	Forged Brass	1	Y
10	Body	Cast Brass	1	Y

LF BRASS BOILER DRAIN SPOUT- ANGLE

PART#	NOMINAL SIZE	D	H	L	FIP	
942132LF	1/2" FIP X 3/4" MHT	2.12	2.16	1.14	1/2"-14NPT	
942133LF	3/4" FIPT X 3/4" MHT	2.12	2.16	1.14	3/4"-14NPT	

NO	PARTS	MATERIALS	QTY	WATER CONTACT
1	Bolt	Hot Rolled	1	N
2	Name Plate	Aluminium	1	N
3	Handle	Zinc	1	N
4	Packing Nut	Brass Rod	1	N
5	Packing	Teflon Polyflon	1	Y
6	Bonnet	Brass Rod	1	Y
7	Packing	Nylon	1	Y
8	Stem	Brass Rod	1	Y
9	Seat Packing	Rubber (NBR)	1	Y
10	Screw	Forged Brass	1	Y
11	Body	Cast Brass	1	Y

WARNING: This product can expose you to chemicals, including lead, which are known to the State of California to cause cancer and birth defects or other reproductive harm. For more information, visit www.P65Warnings.ca.gov

LOW PRESSURE LF BRASS VALVES

PLUMBING

LF SILLCOCK VALVE WITH PEX CONNECTIONS

NO	PARTS	MATERIALS	QTY	WATER CONTACT
1	Nut	Hot Rolled	1	N
2	Name Plate	Aluminium	1	N
3	Handle	Cast Iron	1	N
4	Packing Nut	Brass Rod	1	N
5	Packing	Rubber (NBR)	1	Y
6	Bonnet	Cast Brass	1	Y
7	Stem	Cast Brass	1	Y
8	Seat Packing	Rubber (NBR)	1	Y
9	Screw	Forged Brass	1	Y
10	Body	Cast Brass	1	Y

PART#	NOMINAL SIZE	B	C	D	H	L	
942142LF	1/2" PEX F1807 x 3/4" MHT	2.58	0.22	2.09	2.40	2.34	
942143LF	3/4" PEX F1807 x 3/4" MHT	2.58	0.22	2.09	2.40	2.40	

LF SILLCOCK VALVE WITH PEX CONNECTIONS (COLD EXPANSION)

NO	PARTS	MATERIALS	QTY	WATER CONTACT
1	Nut	Hot Rolled	1	N
2	Name Plate	Aluminium	1	N
3	Handle	Cast Iron	1	N
4	Packing Nut	Brass Rod	1	N
5	Packing	Rubber (NBR)	1	Y
6	Bonnet	Cast Brass	1	Y
7	Stem	Cast Brass	1	Y
8	Seat Packing	Rubber (NBR)	1	Y
9	Screw	Forged Brass	1	Y
10	Body	Cast Brass	1	Y

PART#	NOMINAL SIZE	B	C	D	H	L	
942144LF	1/2" PEX F1960 x 3/4" MHT	2.58	0.22	2.08	2.40	2.34	
942145LF	3/4" PEX F1960 x 3/4" MHT	2.58	0.22	2.08	2.40	2.40	

VACUUM BREAKER

- Male hose and female hose threads can be broken off for permanent attachment
- Set screw
- Vandal proof
- Rough brass construction
- Prevents back-siphonage on hoses to prevent potable water from getting contaminated
- Certified under ASSE Std. 1011
- UPC
- CSA

PART #	SIZE	LIST PRICE
947055LF	3/4" x 3/4"	---

WARNING: This product can expose you to chemicals, including lead, which are known to the State of California to cause cancer and birth defects or other reproductive harm. For more information, visit www.P65Warnings.ca.gov

LEAD FREE

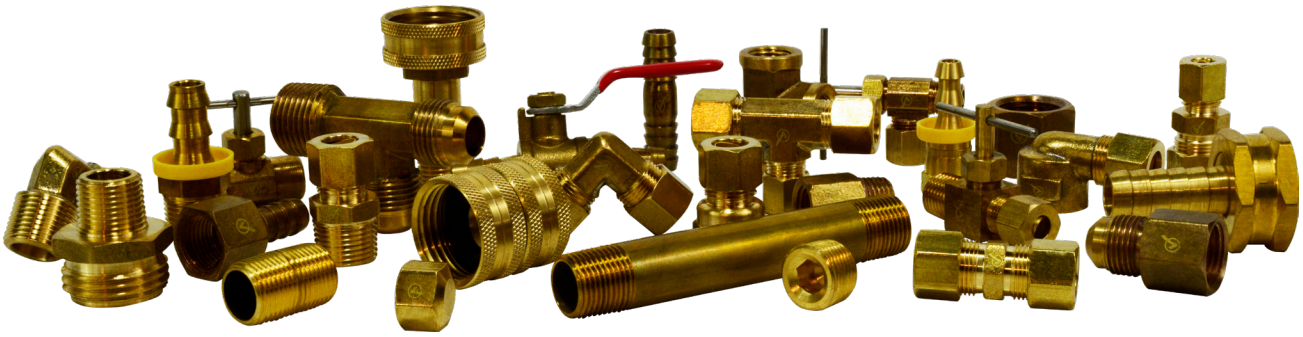

What is the new lead-free requirement?
In 2011, the Reduction of Lead in Drinking Water Act was signed into law. The Act has reduced the lead content allowed in drinking water system and plumbing materials by changing the definition of "lead-free" in Section 1417of the Safe Drinking Water Act.

*The term "lead-free" has been updated from notmore that 8% lead content to mean "**not more than a weighted average of 0.25% lead when used with respect to the wetted surfaces of pipes, pipe fittings, plumbing fittings and fixtures."***

How do I know which products must meet the new lead-free requirement?
The prohibitions on use and introduction into commerce apply to all pipe, pipe fittings, plumbing fittings, and fixtures (henceforth reffered to as "products"), including stocked inventories that have not been installed. This includes coated or uncoated brass or bronze materials. By using the flowchart below as a guide, you can determine if a product must meet the new lead-free requirement:

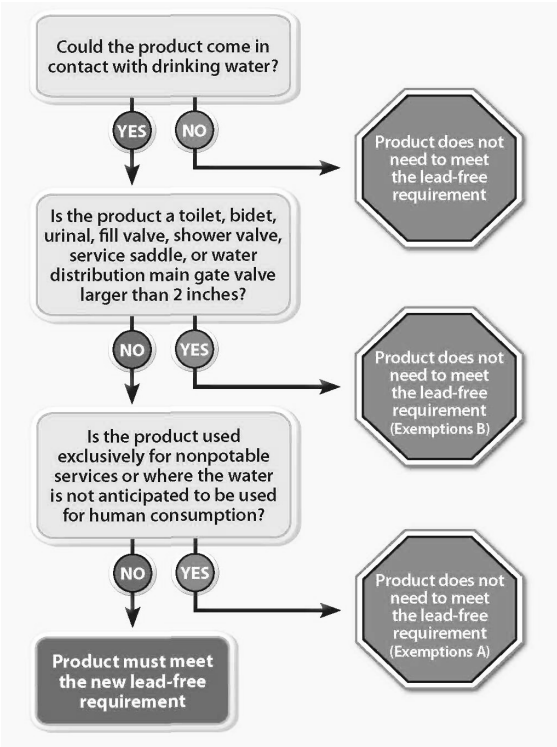

Lead-Free Requirement Exemptions
(A) The new requirement does not apply to pipes, pipe fittings, plumbing fittings, or fixtures, including backflow preventers, that are used exclusively for nonpotable service such as manufacturing, industrial processing, irrigation, outdoor watering or any other uses where the water is not anticipated to be used for human consumption.

(B) The new requirement does not apply to toilets, bidets, urinals, fill valves, flushometer valves, tub fillers, shower valves, service saddles or water distribution main gate valves 2 inches in diameter or larger.

WARNING: This product can expose you to chemicals, including lead, which are known to the State of California to cause cancer and birth defects or other reproductive harm. For more information, visit www.P65Warnings.ca.gov

BRASS PIPE FITTINGS LEAD FREE

- One piece construction, available in barstock or forgings
- Used with brass or steel pipe
- All pipe threads are "American Standard Taper Pipe Threads"
- Fair vibration resistance
- Used in low to medium pressure applications
- Teflon tape or pipe sealant is recommended
- Pipe threads should be tightened 2 1/2 turns past finger tight

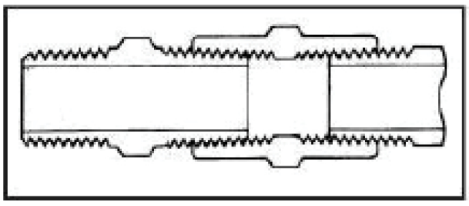

NOMINAL PIPE SIZE	1/8	1/4	3/8	1/2	3/4	1
THREAD SIZE	1/8-27	1/4-18	3/8-18	1/2-14	3/4-14	1-11 1/2
APPROX. DIAMETER IN INCHES	3/8"	1/2"	5/8"	3/4"	1"	1-3/8"

BRASS PIPE FITTINGS

ELBOW 90° BARSTOCK

LF100

PART #	SIZE	LIST
706100-02	1/8"	---
706100-04	1/4"	---
706100-06	3/8"	---
706100-08	1/2"	---
706100-12	3/4"	---

ELBOW 90° FORGED

PART #	SIZE	LIST
706200-02	1/8"	---
706200-04	1/4"	---
706200-06	3/8"	---
706200-08	1/2"	---
706200-12	3/4"	---

REDUCING ELBOW FORGED

PART #	SIZE	LIST
706205-0604	3/8" x 1/4"	---

ELBOW 45°

LF10045

PART #	SIZE	LIST
706107-02	1/8"	---
706107-04	1/4"	---

WARNING: This product can expose you to chemicals, including lead, which are known to the State of California to cause cancer and birth defects or other reproductive harm. For more information, visit www.P65Warnings.ca.gov

LEAD FREE PIPE
PLUMBING

TEE BARSTOCK

LF101

PART #	SIZE	LIST
706101-02	1/8"	---
706101-04	1/4"	---
706101-06	3/8"	---
706101-08	1/2"	---
706101-12	3/4"	---

TEE FORGED

PART #	SIZE	LIST
706201-02	1/8"	---
706201-04	1/4"	---
706201-06	3/8"	---
706201-08	1/2"	---
706201-12	3/4"	---

REDUCING TEE FORGED

PART #	SIZE	LIST
706206-060604	3/8"x3/8"x1/4"	---

CROSS BARSTOCK

LF102

PART #	SIZE	LIST
706102-02	1/8"	
706102-04	1/4"	
706102-06	3/8"	
706102-08	1/2"	
706102-12	3/4"	

COUPLING

LF103

PART #	SIZE	LIST
706103-02	1/8"	---
706103-04	1/4"	---
706103-06	3/8"	---
706103-08	1/2"	---
706103-12	3/4"	---

WARNING: This product can expose you to chemicals, including lead, which are known to the State of California to cause cancer and birth defects or other reproductive harm. For more information, visit www.P65Warnings.ca.gov

LEAD FREE PIPE
PLUMBING

UNION

LF104

PART #	SIZE	LIST
706104-02	1/8"	---
706104-04	1/4"	---
706104-06	3/8"	---
706104-08	1/2"	---
706104-12	3/4"	---

CAP

LF108

PART #	SIZE	LIST
706108-02	1/8"	---
706108-04	1/4"	---
706108-06	3/8"	---
706108-08	1/2"	---
706108-12	3/4"	---

PLUG CORED SQUARE HEAD

LF

PART #	SIZE	LIST
706109-02	1/8"	---
706109-04	1/4"	---
706109-06	3/8"	---
706109-08	1/2"	---
706109-12	3/4"	---

PLUG SOLID SQUARE HEAD

LF109SD

PART #	SIZE	LIST
706114-02	1/8"	---
706114-04	1/4"	---
706114-06	3/8"	---
706114-08	1/2"	---
706114-12	3/4"	---

COUNTERSUNK PLUG HEX

LF109AL

PART #	SIZE	LIST
706115-02	1/8"	---
706115-04	1/4"	---
706115-06	3/8"	---
706115-08	1/2"	---
706115-12	3/4"	---

WARNING: This product can expose you to chemicals, including lead, which are known to the State of California to cause cancer and birth defects or other reproductive harm. For more information, visit www.P65Warnings.ca.gov

LEAD FREE PIPE
PLUMBING

FACE BUSHING

LF110F

PART #	SIZE	LIST
706140-0402	1/4" x 1/8"	---
706140-0604	3/8" x 1/4"	---
706140-0806	1/2" x 3/8"	---
706140-1208	3/4" x 1/2"	---

PLUG CORED HEX HEAD

LF121

PART #	SIZE	LIST
706121-02	1/8"	---
706121-04	1/4"	---
706121-06	3/8"	---
706121-08	1/2"	---
706121-12	3/4"	---

PLUG SOLID HEX HEAD

PART #	SIZE	LIST
706125-02	1/8"	---
706125-04	1/4"	---
706125-06	3/8"	---
706125-08	1/2"	---

HEX BUSHING

LF110

PART #	SIZE	LIST
706110-0402	1/4" x 1/8"	---
706110-0602	3/8" x 1/8"	---
706110-0604	3/8" x 1/4"	---
706110-0802	1/2" x 1/8"	---
706110-0804	1/2" x 1/4"	---
706110-0806	1/2" x 3/8"	---
706110-1202	3/4" x 1/8"	---
706110-1204	3/4" x 1/4"	---
706110-1206	3/4" x 3/8"	---
706110-1208	3/4" x 1/2"	---
706110-1604	1" x 1/4"	---
706110-1606	1" x 3/8"	---
706110-1608	1" x 1/2"	---
706110-1612	1" x 3/4"	---

WARNING: This product can expose you to chemicals, including lead, which are known to the State of California to cause cancer and birth defects or other reproductive harm. For more information, visit www.P65Warnings.ca.gov

LEAD FREE PIPE
PLUMBING

CLOSE NIPPLE

LF112

PART #	SIZE	LIST
706112-02	1/8"	---
706112-04	1/4"	---
706112-06	3/8"	---
706112-08	1/2"	---
706112-12	3/4"	---

LONG NIPPLE

LF113

PART #	SIZE	LIST
706113-0224	1/8" x 1-1/2"	---
706113-0232	1/8" x 2"	---
706113-0240	1/8" x 2-1/2"	---
706113-0248	1/8" x 3"	---
706113-0424	1/4" x 1-1/2"	---
706113-0432	1/4" x 2"	---
706113-0440	1/4" x 2-1/2"	---
706113-0448	1/4" x 3"	---
706113-0624	3/8" x 1-1/2"	---
706113-0632	3/8" x 2"	---

HEX NIPPLE

LF23325X
LF122

PART #	SIZE	LIST
706122-02	1/8"	---
706122-04	1/4"	---
706122-06	3/8"	---
706122-08	1/2"	---
706122-12	3/4"	---
706122-16	1"	---

REDUCING HEX NIPPLE

LF123

PART #	SIZE	LIST
706123-0402	1/4" x 1/8"	---
706123-0602	3/8" x 1/8"	---
706123-0604	3/8" x 1/4"	---
706123-0804	1/2" x 1/4"	---
706123-0806	1/2" x 3/8"	---
706123-1208	3/4" x 1/2"	---

WARNING: This product can expose you to chemicals, including lead, which are known to the State of California to cause cancer and birth defects or other reproductive harm. For more information, visit www.P65Warnings.ca.gov

REDUCING COUPLING

LF119

PART #	SIZE	LIST
706119-0402	1/4" x 1/8"	---
706119-0602	3/8" x 1/8"	---
706119-0604	3/8" x 1/4"	---
706119-0802	1/2" x 1/8"	---
706119-0804	1/2" x 1/4"	---
706119-0806	1/2" x 3/8"	---
706119-1208	3/4" x 1/2"	---

ADAPTER

LF120

PART #	SIZE	LIST
706120-0202	1/8" x 1/8"	---
706120-0402	1/4" x 1/8"	---
706120-0404	1/4" x 1/4"	---
706120-0602	3/8" x 1/8"	---
706120-0604	3/8" x 1/4"	---
706120-0606	3/8" x 3/8"	---
706120-0804	1/2" x 1/4"	---
706120-0806	1/2" x 3/8"	---
706120-0808	1/2" x 1/2"	---
706120-1208	3/4" x 1/2"	---
706120-1212	3/4" x 3/4"	---

SHORT BARSTOCK STREET ELBOW 90°

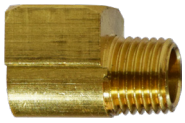

PART #	SIZE	LIST
706116-02	1/8"	---
706116-04	1/4"	---
706116-06	3/8"	---
706116-08	1/2"	---
706116-12	3/4"	---

BARSTOCK ST ELBOW

LF116

PART #	SIZE	LIST
706118-02	1/8"	---
706118-04	1/4"	---
706118-06	3/8"	---

WARNING: This product can expose you to chemicals, including lead, which are known to the State of California to cause cancer and birth defects or other reproductive harm. For more information, visit www.P65Warnings.ca.gov

LEAD FREE PIPE
PLUMBING

FORGED* STREET ELBOW 90°

PART #	SIZE	LIST
706216-02	1/8"	---
706216-04	1/4"	---
706216-06	3/8"	---
706216-08	1/2"	---
706216-12	3/4"	---

FORGED* REDUCING STREET ELBOW

PART #	SIZE	LIST
706228-0402	1/4" x 1/8"	---
706228-0406	1/4" x 3/8"	---
706228-0608	3/8" x 1/2"	---
706228-0806	1/2" x 3/8"	---

* Forged and Barstock shapes may be substituted for one another in Lead Free.

STREET ELBOW 45°

LF124

PART #	SIZE	LIST
706124-02	1/8"	---
706124-04	1/4"	---
706124-06	3/8"	---
706124-08	1/2"	---
706124-12	3/4"	---

STREET TEE BARSTOCK

LF127

PART #	SIZE	LIST
706127-02	1/8"	---
706127-04	1/4"	---
706127-06	3/8"	---
706127-08	1/2"	---
706127-12	3/4"	

STREET TEE FORGED

PART #	SIZE	LIST
706227-02	1/8"	---
706227-04	1/4"	---
706227-06	3/8"	---

ELBOW BARSTOCK

PART #	SIZE	LIST
706130-02	1/8"	---
706130-04	1/4"	---
706230-06	3/8"	---

WARNING: This product can expose you to chemicals, including lead, which are known to the State of California to cause cancer and birth defects or other reproductive harm. For more information, visit www.P65Warnings.ca.gov

LEAD FREE PIPE/LEAD FREE PUSH-ON

PLUMBING

ELBOW FORGED

PART #	SIZE	LIST
706230-02	1/8"	---
706230-04	1/4"	---
706230-06	3/8"	---
706230-08	1/2"	---

REDUCING ELBOW

PART #	SIZE	LIST
706235-0402	1/4" x 1/8"	---
706235-0602	3/8" x 1/8"	---
706235-0604	3/8" x 1/4"	---
706235-0806	1/2" x 3/8"	---

TEE BARSTOCK

LF131

PART #	SIZE	LIST
706131-02	1/8"	---
706131-04	1/4"	---
706131-06	3/8"	---
706131-08	1/2"	---

TEE FORGED

PART #	SIZE	LIST
706232-02	1/8"	---
706232-04	1/4"	---
706232-06	3/8"	---

PUSH-ON

MALE ADAPTER

PART #	HOSE I.D. X MALE NPTF	LIST
707201-0402	1/4″ x 1/8″	---
707201-0404	1/4″ x 1/4″	---
707201-0604	3/8″ x 1/4″	---
707201-0606	3/8″ x 3/8″	---
707201-0608	1/2″ x 3/8″	---
707201-0808	1/2″ x 1/2″	---

WARNING: This product can expose you to chemicals, including lead, which are known to the State of California to cause cancer and birth defects or other reproductive harm. For more information, visit www.P65Warnings.ca.gov

LEAD FREE PIPE HOSE BARBS
PLUMBING

RIGID MALE ADAPTER

LF29

PART #	HOSE I.D. X MALE NPTF	LIST
707001-0202	1/8" x 1/8"	---
707001-0204	1/8" x 1/4"	---
707001-0302	3/16″ x 1/8″	---
707001-0304	3/16" x 1/4"	---
707001-0402	1/4″ x 1/8″	---
707001-0404	1/4″ x 1/4″	---
707001-0406	1/4" x 3/8"	---
707001-0408	1/4" x 1/2"	---
707001-0502	5/16″ x 1/8″	---
707001-0504	5/16″ x 1/4″	---
707001-0506	5/16" x 3/8"	---
707001-0602	3/8″ x 1/8″	---
707001-0604	3/8″ x 1/4″	---
707001-0606	3/8″ x 3/8″	---
707001-0608	3/8″ x 1/2″	---
707001-0804	1/2″ x 1/4″	---
707001-0806	1/2″ x 3/8″	---
707001-0808	1/2″ x 1/2″	---
707001-0812	1/2" x 3/4"	---
707001-1006	5/8" x 3/8"	---
707001-1008	5/8″ x 1/2″	---
707001-1012	5/8" x 3/4"	---
707001-1208	3/4″ x 1/2″	---
707001-1212	3/4″ x 3/4″	---
707001-1612	1" x 3/4"	---
707001-1616	1" x 1"	---

RIGID FEMALE ADAPTER

LF29F

PART #	HOSE I.D. X FEMALE NPTF	LIST
707002-0202	1/8" x 1/8"	---
707002-0204	1/8" x 1/4"	---
707002-0302	3/16" x 1/8"	---
707002-0304	3/16" x 1/4"	---
707002-0402	1/4" x 1/8"	---
707002-0404	1/4" x 1/4"	---
707002-0406	1/4" x 3/8"	---
707002-0502	5/16" x 1/8"	---
707002-0504	5/16" x 1/4"	---
707002-0506	5/16" x 3/8"	---
707002-0604	3/8″ x 1/4″	---
707002-0606	3/8″ x 3/8″	---
707002-0608	3/8″ x 1/2″	---
707002-0804	1/2" x 1/4"	---
707002-0806	1/2" x 3/8"	---
707002-0808	1/2″ x 1/2″	---
707002-1212	3/4" x 3/4"	---

WARNING: This product can expose you to chemicals, including lead, which are known to the State of California to cause cancer and birth defects or other reproductive harm. For more information, visit www.P65Warnings.ca.gov

LEAD FREE HOSE BARBS

PLUMBING

FORGED HOSE BARB 90° ELBOW

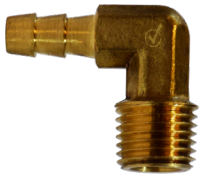

LF29EBS

PART #	HOSE I.D. X MALE NPTF	LIST
707020-0402	1/4" x 1/8"	---
707020-0404	1/4″ x 1/4″	---
707020-0602	3/8" x 1/8"	---
707020-0604	3/8″ x 1/4″	---
707020-0606	3/8″ x 3/8″	---
707020-0608	3/8" x 1/2"	---
707020-0804	1/2" x 1/4"	---
707020-0806	1/2" x 3/8"	---
707020-0808	1/2" x 1/2"	---

HOSE BARB TEES

PART #	HOSE BARB SIZE	LIST
707024-04	1/4″	---
707024-05	5/16"	---
707024-06	3/8″	---

MENDER/ SPLICER

PART #	HOSE I.D. X HOSE I.D.	LIST
707014-03	3/16"	---
707014-04	1/4″	---
707014-05	5/16"	---
707014-06	3/8"	---
707014-08	1/2″	---
707014-10	5/8"	---
707014-12	3/4"	---

LEAD FREE MINI BALL VALVES BARB X BARB

PART #	H.B. X H.B.	LIST
944142LF	1/4″	---
944134LF	3/8″	---

WARNING: This product can expose you to chemicals, including lead, which are known to the State of California to cause cancer and birth defects or other reproductive harm. For more information, visit www.P65Warnings.ca.gov

LEAD FREE GARDEN HOSE

PLUMBING

BARSTOCK BRASS GARDEN HOSE COUPLINGS

FEMALE SWIVEL ONLY

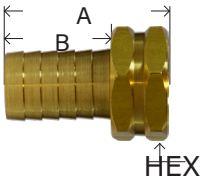

LF29FGH

PART #	HOSE BARB X FGH	LIST
707046-0812	1/2″ x 3/4"	---
707046-1012	5/8″ x 3/4"	---
707046-1212	3/4″ x 3/4"	---

▪ WASHER INCLUDED

MALE END ONLY

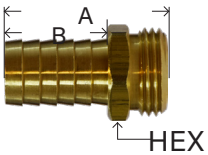

LF29MGH

PART #	HOSE BARB X MGH	LIST
707048-0812	1/2″ x 3/4"	---
707048-1012	5/8″ x 3/4"	---
707048-1212	3/4″ x 3/4"	---

GARDEN HOSE COUPLING

PART #	HOSE BARB SIZE	LIST
707042-08	1/2″	---
707042-10	5/8″	---
707042-12	3/4″	---

▪ WASHER INCLUDED

SWIVEL - FGH X FGH

LFS3

PART #	FGH X FGH	LIST
707403-12	3/4″ x 3/4″	---
707402-12	no swivel	---

▪ WASHER INCLUDED

SWIVEL - FGH X FEMALE PIPE

LFS1
LFS2

PART #	FGH X FGH	LIST
707401-1208	3/4″ x 1/2″	---
707401-1212	3/4″ x 3/4″	---

▪ WASHER INCLUDED

RIGID - FGH X FEMALE PIPE

PART #	FGH X FGH	LIST
707411-1202	3/4" x 1/8"	---
707482-1208	3/4" x 1/2"	---
707482-1212	3/4″ x 3/4″	---

▪ WASHER INCLUDED

WARNING: This product can expose you to chemicals, including lead, which are known to the State of California to cause cancer and birth defects or other reproductive harm. For more information, visit www.P65Warnings.ca.gov

LEAD FREE GARDEN HOSE

PLUMBING

SWIVEL - FGH X MALE PIPE

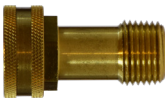

PART #	FGH X MALE NPTF	LIST
707420-1204	3/4″ x 1/4″	---
707420-1206	3/4″ x 3/8″	---
707420-1208	3/4″ x 1/2″	---

▪ WASHER INCLUDED

RIGID - FGH X MALE PIPE

PART #	FGH X FEMALE NPTF	LIST
707484-1208	3/4″ x 1/2″(1/2″SWT)	---
707484-121208	3/4″ x 3/4″(1/2″ FIP)	

▪ WASHER INCLUDED

RIGID - MGH X MGH

LF85GHT

PART #	MGH X MGH	LIST
707486-121208	3/4″ x 3/4″ (1/2" FIP)	---
707486-1212	3/4" x 3/4"	

RIGID - MGH X FEMALE PIPE

LF110GH-124

PART #	MGH X FEMALE NPTF	LIST
707480-1204	3/4" x 1/4"	---
707480-1206	3/4" x 3/8"	---
707480-1208	3/4" x 1/2"	---
707480-1212	3/4″ x 3/4″	---

RIGID - MGH X MALE PIPE

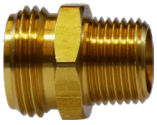

LF68GH1216

PART #	MGH X MALE NPTF	LIST
707478-1206	3/4″ x 3/8″	---
707478-1208	3/4″ x 1/2″	---
707478-120808	3/4" x 1/2" (1/2" SWT)	---
707478-121208	3/4″ x 3/4″ x 1/2″	---

CAST BRASS HOSE - "Y" CONNECTOR

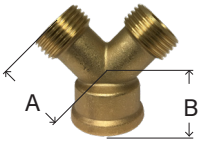

LFHY12

PART #	FGH X MGH(2)	LIST
707461-12	3/4″	---

WARNING: This product can expose you to chemicals, including lead, which are known to the State of California to cause cancer and birth defects or other reproductive harm. For more information, visit www.P65Warnings.ca.gov

LEAD FREE GARDEN HOSE

PLUMBING

GARDEN HOSE CAP

LFHC-12W

PART #	SIZE	LIST
707404-12	3/4″ Die Cast	---

GARDEN HOSE NUT

707407-12

707406-12

PART #	SIZE	LIST
707407-12	Knurled	---
707406-12	Hex Nut	---

EVAPORATING COOLER ADAPTERS

LFECF12H

PART #	SIZE	LIST
30019LF*	3/4" x 3/4" x 1/8"	
30020LF**	3/4" x 3/4" x 1/8"	
30013LF*	1/2" x 1/2" x 1/8"	

* Pipe Threads
** Garden Hose Threads

WARNING: This product can expose you to chemicals, including lead, which are known to the State of California to cause cancer and birth defects or other reproductive harm. For more information, visit www.P65Warnings.ca.gov

SAE 45° brass flare fittings

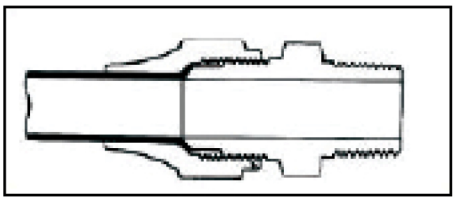

- Two pieces construction – nut and body
- Use with copper, brass, aluminum, or steel tubing
- -40° to +250° F. temperature range
- Resists mechanical pullout
- Easy to disassemble and can be reassembled many times, with no effect on the seal
- Primary uses: fuel equipment, plumbing, gases, refrigeration, and vacuum lines
- Meet functional requirements for SAE, ASME and ASA codes for pressure piping

TO ASSEMBLE:
1 Cut smooth, square end on tubing
2 Slide nut onto tube - threads facing end
3 Flare end of tube
4 Thread nut to body until snug, then

TUBE O.D.	1/8	3/16	1/4	5/16	3/8	7/16	1/2	5/8	3/4	7/8	1
THREAD SIZE	5/16-24	3/8-24	7/16-20	1/2-20	5/8-18	11/16-16	3/4-16	7/8-14	11/16-14	1-1/4-12	1 3/8-12

SHORT ROD NUT

LF41S
LF41XS

PART #	THREAD SIZE UNF	LIST
704014-02	1/8"	---
704014-03	3/16"	---
704014-04	1/4"	---
704014-05	5/16"	---
704014-06	3/8″	---
704014-08	1/2″	---
704014-10	5/8"	---
704014-12	3/4"	---

SHORT FORGED NUT

PART #	THREAD SIZE UNF	LIST
704018-04	1/4"	---
704018-06	3/8″	---
704020-0604	3/8" x 1/4"	---
704018-08	1/2″	---
704020-0806	1/2" x 3/8"	---
704018-10	5/8"	---
704020-1008	5/8" x 1/2"	---
704018-12	3/4"	---

WARNING: This product can expose you to chemicals, including lead, which are known to the State of California to cause cancer and birth defects or other reproductive harm. For more information, visit www.P65Warnings.ca.gov

LEAD FREE FLARE
PLUMBING

UNION

LF242

PART #	THREAD SIZE UNF	LIST
704042-02	1/8"	---
704042-03	3/16"	---
704042-04	1/4″	---
704042-05	5/16"	---
704042-06	3/8″	---
704056-0604	3/8" x 1/4"	---
704042-08	1/2″	---
704056-0804	1/2" x 1/4"	---
704056-0806	1/2" x 3/8"	---
704042-10	5/8″	---
704056-1006	5/8" x 3/8"	---
704056-1008	5/8" x 1/2"	---
704042-12	3/4"	---

CAP

LF40

PART #	THREAD SIZE UNF	LIST
704040-04	1/4″	---
704040-05	5/16"	---
704040-06	3/8″	---
704040-08	1/2″	---
704040-10	5/8″	---

UNION TEE

1 2

3

PART #	SIZE (1 X 2 X 3)	LIST
704044-02	1/8"	---
704044-03	3/16"	---
704044-04	1/4"	---
704044-05	5/16"	---
704044-06	3/8"	---
704044-08	1/2"	---
704044-10	5/8"	---

REDUCING UNION TEE

PART #	SIZE (1 X 2 X 3)	LIST
704059-060604	3/8" x 3/8" x 1/4"	---
704059-060608	3/8" x 3/8" x 1/2"	---
704059-080806	1/2" x 1/2" x 3/8"	---
704059-080810	1/2" x 1/2" x 5/8"	---
704059-101008	5/8" x 5/8" x 1/2"	---

PLUG

LF39

PART #	THREAD SIZE UNF	LIST
704039-04	1/4"	---
704039-06	3/8"	---
704039-08	1/2"	---
704039-10	5/8"	---

WARNING: This product can expose you to chemicals, including lead, which are known to the State of California to cause cancer and birth defects or other reproductive harm. For more information, visit www.P65Warnings.ca.gov

LEAD FREE FLARE
PLUMBING

FEMALE ADAPTER

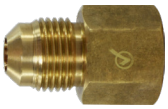

LF46

PART #	MALE FLARE X FEMALE NPTF	LIST
704046-0302	3/16" x 1/8"	---
704046-0402	1/4" x 1/8"	---
704046-0404	1/4" x 1/4"	---
704046-0406	1/4" x 3/8"	---
704046-0408	1/4" x 1/2"	---
704046-0502	5/16" x 1/8"	---
704046-0504	5/16" x 1/4"	---
704046-0602	3/8" x 1/8"	---
704046-0604	3/8" x 1/4"	---
704046-0606	3/8″ x 3/8″	---
704046-0608	3/8″ x 1/2″	---
704046-0612	3/8" x 3/4"	---
704046-0804	1/2" x 1/4"	---
704046-0806	1/2″ x 3/8″	---
704046-0808	1/2″ x 1/2″	---
704046-0812	1/2″ x 3/4″	---
704046-1006	5/8" x 3/8"	---
704046-1008	5/8" x 1/2"	---
704046-1012	5/8" x 3/4"	---
704046-1212	3/4" x 3/4"	---

MALE BRANCH TEE

PART #	SIZE	LIST
704045-0402	1/4" x 1/8"	---
704045-0404	1/4" x 1/4"	---
704045-0406	1/4" x 3/8"	---
704045-0604	3/8" x 1/4"	---
704045-0606	3/8" x 3/8"	---
704045-0608	3/8" x 1/2"	---
704045-0806	1/2" x 3/8"	---
704045-0808	1/2" x 1/2"	---
704045-1008	5/8" x 1/2"	---

FORGED SWIVEL

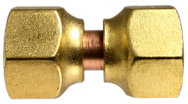

LF700

PART #	FEMALE FLARE UNF	LIST
704070-04	1/4"	---
704070-05	5/16"	---
704070-06	3/8″	---
704070-08	1/2″	---
704070-10	5/8″	---
704075-0604	3/8" x 1/4"	---
704075-0806	1/2" x 3/8"	---

WARNING: This product can expose you to chemicals, including lead, which are known to the State of California to cause cancer and birth defects or other reproductive harm. For more information, visit www.P65Warnings.ca.gov

LEAD FREE FLARE
PLUMBING

MALE ADAPTER

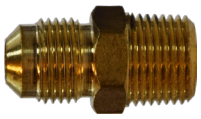

LF48
LF248

PART #	MALE FLARE X MALE NPTF	LIST
704048-0202	1/8" x 1/8"	---
704048-0302	3/16" x 1/8"	---
704048-0402	1/4″ x 1/8″	---
704048-0404	1/4″ x 1/4″	---
704048-0406	1/4" x 3/8"	---
704048-0408	1/4″ x 1/2″	---
704048-0502	5/16" x 1/8"	---
704048-0504	5/16" x 1/4	---
704048-0506	5/16" x 3/8"	---
704048-0602	3/8″ x 1/8″	---
704048-0604	3/8″ x 1/4″	---
704048-0606	3/8″ x 3/8″	---
704048-0608	3/8″ x 1/2″	---
704048-0612	3/8" x 3/4"	---
704048-0804	1/2" x 1/4"	---
704048-0806	1/2″ x 3/8″	---
704048-0808	1/2″ x 1/2″	---
704048-0812	1/2″ x 3/4″	---
704048-1006	5/8" x 3/8	---
704048-1008	5/8" x 1/2"	---
704048-1012	5/8" x 3/4"	---
704048-1208	3/4" x 1/2"	---
704048-1212	3/4″ x 3/4″	---
704048-1412	7/8" x 3/4"	---

UNION ELBOW

BS
LF255B

PART #	FLARE X FLARE	LIST
704055-04	1/4"	---
704055-06	3/8"	
704055-08	1/2"	---
704057-0806	1/2" x 3/8"	---
704055-10	5/8"	

FLARE X FIP TEE

PART #	FLARE X FLARE X FE PIPE	LIST
704058-080808	1/2" x 1/2" x 1/2"	---

WARNING: This product can expose you to chemicals, including lead, which are known to the State of California to cause cancer and birth defects or other reproductive harm. For more information, visit www.P65Warnings.ca.gov

LEAD FREE FLARE
PLUMBING

90° MALE ELBOW

LF249B
BS

PART #	FLARE X MALE PIPE	LIST
704049-0302	3/16" x 1/8"	---
704049-0402	1/4″ x 1/8″	---
704049-0404	1/4″ x 1/4″	---
704049-0406	1/4″ x 3/8″	---
704049-0408	1/4″ x 1/2″	---
704049-0502	5/16" x 1/8"	---
704049-0504	5/16" x 1/4	---
704049-0602	3/8" x 1/8"	---
704049-0604	3/8″ x 1/4″	---
704049-0606	3/8″ x 3/8″	---
704049-0608	3/8″ x 1/2″	---
704049-0612	3/8" x 3/4"	---
704049-0804	1/2" x 1/4"	---
704049-0806	1/2″ x 3/8″	---
704049-0808	1/2″ x 1/2″	---
704049-0812	1/2″ x 3/4″	---
704049-1006	5/8" x 3/8"	---
704049-1008	5/8" x 1/2"	---
704049-1012	5/8" x 3/4"	---
704049-1208	3/4" x 1/2"	---
704049-1212	3/4" x 3/4"	---

FEMALE ELBOW

PART #	FLARE X FEMALE PIPE	LIST
704050-0402	1/4″ x 1/8″	---
704050-0404	1/4″ x 1/4″	---
704050-0604	3/8″ x 1/4″	---
704050-0606	3/8″ x 3/8″	---
704050-0608	3/8″ x 1/2″	---
704050-0612	3/8" x 3/4"	---
704050-0806	1/2″ x 3/8″	---
704050-0808	1/2″ x 1/2″	---
704050-0812	1/2″ x 3/4″	---
704050-1008	5/8" x 1/2"	---
704050-1012	5/8" x 3/4"	---
704050-1212	3/4" x 3/4"	---

WARNING: This product can expose you to chemicals, including lead, which are known to the State of California to cause cancer and birth defects or other reproductive harm. For more information, visit www.P65Warnings.ca.gov

LEAD FREE COMPRESSION
PLUMBING

BRASS COMPRESSION FITTINGS - LEAD FREE

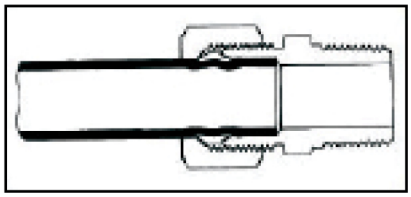

- Three piece construction- nut, sleeve (or ferrule) and body
- Use with copper, aluminum, or plastic tubing (plastic requires 60P sleeve and 61P insert)
- -40° to +250° F. temperature range
- Easy to disassemble, no flaring tool required
- Primary uses: water, gasoline, oil, and vacuum lines

TO ASSEMBLE:
1 Cut smooth, square end on tubing
2 Slide nut, then sleeve onto tube. Threads must face end
3 Insert tube into fitting
4 Thread nut onto fitting until snug, then as follows:

Tube O.D.	1/8	3/16	1/4	5/16	3/8	7/16	1/2	5/8	3/4	7/8
Thread Size	5/16-24	3/8-24	7/16-24	1/2-24	9/16-24	5/8-24	11/16-20	13/16-18	1-18	1-1/8-18

BRASS compression FITTINGS

BRASS SLEEVE

LF260

- FERRULES

PART #	SIZE	LIST
700060-02	1/8"	---
700060-03	3/16″	---
700060-04	1/4″	---
700060-05	5/16″	---
700060-06	3/8″	---
700060-07	7/16"	---
700060-08	1/2″	---
700060-10	5/8″	---
700060-12	3/4"	---
700060-14	7/8″	---

60 260

DELRIN SLEEVE

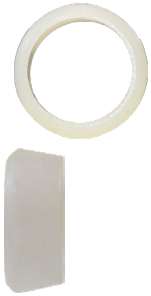

PART #	SIZE	LIST
00560-04	1/4″	---
00560-05	5/16″	---
00560-06	3/8″	---
00560-08	1/2″	---
00560-10	5/8″	---

60-P

WARNING: This product can expose you to chemicals, including lead, which are known to the State of California to cause cancer and birth defects or other reproductive harm. For more information, visit www.P65Warnings.ca.gov

LEAD FREE COMPRESSION

PLUMBING

BRASS NUT

LF261

PART #	SIZE	LIST
700061-02	1/8"	---
700061-03	3/16"	---
700061-04	1/4"	---
700061-05	5/16"	---
700061-06	3/8"	---
700061-07	7/16"	---
700061-08	1/2"	---
700061-10	5/8"	---
700061-12	3/4"	---
700061-14	7/8"	---

BRASS INSERT

▪ SLEEVE

PART #	SIZE	LIST
700561-02	1/8"	---
700561-03	3/16"	---
700561-04	1/4″	---
700561-05	5/16″	---
700561-06	3/8″	---
700561-08	1/2″	---
700561-10	5/8″	

BRASS NUT W/ CAPTIVE SLEEVE

LF611X6

PART #	SIZE	LIST
700261-02	1/8"	---
700261-03	3/16"	---
700261-04	1/4"	---
700261-05	5/16"	---
700261-06	3/8"	---
700261-08	1/2"	---
700261-10	5/8"	---
700261-12	3/4"	---
700261-14	7/8"	---

CAP

PART #	SIZE	LIST
700081-04	1/4″	---
700081-05	5/16	---
700081-06	3/8″	---
700081-08	1/2″	---
700081-10	5/8″	---

WARNING: This product can expose you to chemicals, including lead, which are known to the State of California to cause cancer and birth defects or other reproductive harm. For more information, visit www.P65Warnings.ca.gov

LEAD FREE COMPRESSION
PLUMBING

UNION

LF262

PART #	SIZE	LIST
700062-02	1/8″	---
700062-03	3/16″	---
700062-04	1/4″	---
700062-05	5/16″	---
700062-06	3/8″	---
700062-07	7/16"	---
700062-08	1/2″	---
700062-10	5/8″	---
700062-12	3/4″	---
700062-14	7/8″	---

M-62

REDUCING UNION

LF62R

PART #	SIZE	LIST
700082-0402	1/4″ x 1/8″	---
700082-0403	1/4″ x 3/16″	---
700082-0504	5/16″ x 1/4″	---
700082-0604	3/8″ x 1/4″	---
700082-0605	3/8" x 5/16"	---
700082-0806	1/2" x 3/8"	---
700082-1006	5/8" x 3/8"	---
700082-1008	5/8" x 1/2"	---

62-R

TANK UNION

LF62T

PART #	SIZE	LIST
700092-06	3/8"	---
700092-08	1/2"	---
700092-10	5/8"	---
700092-14	7/8"	---

TEE

LF264B

PART #	SIZE	LIST
700064-02	1/8″	---
700064-03	3/16"	---
700064-04	1/4″	---
700064-05	5/16"	---
700064-06	3/8″	---
700064-08	1/2″	---
700064-10	5/8″	---
700064-14	7/8″	---

WARNING: This product can expose you to chemicals, including lead, which are known to the State of California to cause cancer and birth defects or other reproductive harm. For more information, visit www.P65Warnings.ca.gov

LEAD FREE COMPRESSION

PLUMBING

REDUCING TEE

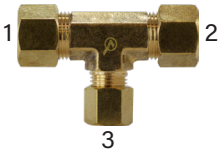

LF264B

PART #	SIZE (1 X 2 X 3)	LIST
700084-040402	1/4" x 1/4" x 1/8"	---
700084-040406	1/4" x 1/4" x 3/8"	---
700084-060604	3/8″ x 3/8″ x 1/4″	
700084-080804	1/2″ x 1/2″ x 1/4″	
700084-080806	1/2″ x 1/2″ x 3/8″	
700084-101006	5/8" x 5/8" x 3/8"	

64-R

ELBOW

LF265

PART #	SIZE	LIST
700065-02	1/8"	---
700065-03	3/16"	---
700065-04	1/4″	---
700065-05	5/16″	---
700065-06	3/8″	---
700065-08	1/2″	---
700065-10	5/8″	---
700065-12	3/4″	---
700065-14	7/8″	---
700085-0604	3/8" x 1/4"	---
700085-0806	1/2" x 3/8"	---
700085-1006	5/8" x 3/8"	---
700085-1008	5/8" x 1/2"	

65 BSE2 165C 265C

WARNING: This product can expose you to chemicals, including lead, which are known to the State of California to cause cancer and birth defects or other reproductive harm. For more information, visit www.P65Warnings.ca.gov

LEAD FREE COMPRESSION

PLUMBING

FEMALE COUPLING

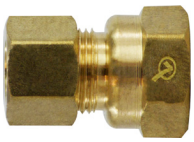

LF66
LF266

PART #	COMP. X FEMALE NPT	LIST
700066-0202	1/8″ x 1/8″	---
700066-0302	3/16″ x 1/8″	---
700066-0304	3/16" x 1/4"	---
700066-0402	1/4″ x 1/8″	---
700066-0404	1/4″ x 1/4″	---
700066-0406	1/4″ x 3/8″	---
700066-0408	1/4″ x 1/2″	---
700066-0502	5/16" x 1/8"	---
700066-0504	5/16″ x 1/4″	---
700066-0506	5/16″ x 3/8″	---
700066-0602	3/8″ x 1/8″	---
700066-0604	3/8″ x 1/4″	---
700066-0606	3/8″ x 3/8″	---
700066-0608	3/8″ x 1/2″	---
700066-0612	3/8″ x 3/4″	---
700066-0804	1/2" x 1/4"	---
700066-0806	1/2″ x 3/8″	---
700066-0808	1/2″ x 1/2″	---
700066-0812	1/2″ x 3/4″	---
700066-1006	5/8" x 3/8"	---
700066-1008	5/8″ x 1/2″	---
700066-1012	5/8″ x 3/4″	---
700066-1208	3/4" x 1/2"	---
700066-1212	3/4" x 3/4"	---
700066-1408	7/8" x 1/2"	---
700066-1412	7/8″ x 3/4″	---

66

COMP X SWEAT ADAPTER

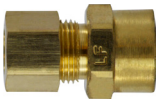

PART #	SIZE	LIST
700086-0610	3/8″ x 1/2″ nom.swt.	---

WARNING: This product can expose you to chemicals, including lead, which are known to the State of California to cause cancer and birth defects or other reproductive harm. For more information, visit www.P65Warnings.ca.gov

LEAD FREE COMPRESSION
PLUMBING

MALE ADAPTER COMP X MIP

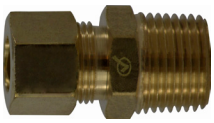

LF68

PART #	SIZE	LIST
700068-0202	1/8″ x 1/8″	---
700068-0302	3/16″ x 1/8″	---
700068-0304	3/16″ x 1/4″	---
700068-0402	1/4″ x 1/8″	---
700068-0404	1/4″ x 1/4″	---
700068-0406	1/4″ x 3/8″	---
700068-0408	1/4″ x 1/2″	---
700068-0502	5/16″ x 1/8″	---
700068-0504	5/16″ x 1/4″	---
700068-0506	5/16" x 3/8"	---
700068-0508	5/16" x 1/2"	---
700068-0602	3/8″ x 1/8″	---
700068-0604	3/8″ x 1/4″	---
700068-0606	3/8″ x 3/8″	---
700068-0608	3/8″ x 1/2″	---
700068-0612	3/8″ x 3/4″	---
700068-0704	7/16″ x 1/4″	---
700068-0706	7/16" x 3/8"	---
700068-0804	1/2″ x 1/4″	---
700068-0806	1/2″ x 3/8″	---
700068-0808	1/2″ x 1/2″	---
700068-0812	1/2″ x 3/4″	---
700068-1006	5/8″ x 3/8″	---
700068-1008	5/8″ x 1/2″	---
700068-1012	5/8″ x 3/4″	---
700068-1208	3/4" x 1/2"	---
700068-1212	3/4″ x 3/4″	---
700068-1408	7/8″ x 1/2″	---
700068-1412	7/8″ x 3/4″	---
700068-1416	7/8" x 1"	---

WARNING: This product can expose you to chemicals, including lead, which are known to the State of California to cause cancer and birth defects or other reproductive harm. For more information, visit www.P65Warnings.ca.gov

LEAD FREE COMPRESSION
PLUMBING

ELBOW COMP X MIP

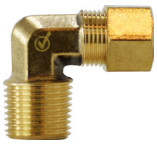

LF269B
LF69F

PART #	SIZE	LIST
700069-0202	1/8" x 1/8"	---
700069-0302	3/16″ x 1/8″	---
700069-0304	3/16" x 1/4"	---
700069-0402	1/4" x 1/8"	---
700069-0404	1/4″ x 1/4″	---
700069-0406	1/4" X 3/8"	---
700069-0408	1/4″ x 1/2″	---
700069-0502	5/16″ x 1/8″	---
700069-0504	5/16″ x 1/4″	---
700069-0506	5/16" x 3/8"	---
700069-0602	3/8″ x 1/8″	---
700069-0604	3/8″ x 1/4″	---
700069-0606	3/8″ x 3/8″	---
700069-0608	3/8″ x 1/2″	---
700069-0612	3/8" x 3/4"	---
700069-0704	7/16" x 1/4"	---
700069-0804	1/2″ x 1/4″	---
700069-0806	1/2″ x 3/8″	---
700069-0808	1/2″ x 1/2″	---
700069-0812	1/2″ x 3/4″	---
700069-1006	5/8″ x 3/8″	---
700069-1008	5/8″ x 1/2″	---
700069-1012	5/8″ x 3/4″	---
700069-1208	3/4" x 1/2"	---
700069-1212	3/4" x 3/4"	---
700069-1412	7/8″ x 3/4″	----

TANK CONNECTOR COMP X MIP

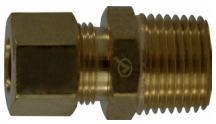

LF68T
- DRILLED THROUGH

PART #	SIZE	LIST
700088-0302	3/16" x 1/8"	---
700088-0402	1/4" x 1/8"	---
700088-0404	1/4" x 1/4"	---
700088-0604	3/8" x 1/4"	---
700088-0606	3/8" x 3/8"	---
700088-0608	3/8" x 1/2"	---
700088-0806	1/2" x 3/8"	---
700088-0808	1/2" x 1/2"	---
700088-1008	5/8" x 1/2"	----

WARNING: This product can expose you to chemicals, including lead, which are known to the State of California to cause cancer and birth defects or other reproductive harm. For more information, visit www.P65Warnings.ca.gov

69 269C BSE1 169C

LEAD FREE COMPRESSION
PLUMBING

FEMALE ELBOW COMP X FIP

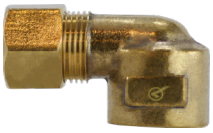

PART #	SIZE	LIST
700070-0202	1/8" x 1/8"	---
700070-0302	3/16" x 1/8"	---
700070-0402	1/4″ x 1/8″	---
700070-0404	1/4″ x 1/4″	---
700070-0406	1/4″ x 3/8″	---
700070-0408	1/4" x 1/2"	---
700070-0502	5/16" x 1/8"	---
700070-0504	5/16" x 1/4"	---
700070-0602	3/8" x 1/8"	---
700070-0604	3/8" x 1/4"	---
700070-0606	3/8″ x 3/8″	---
700070-0608	3/8″ x 1/2″	---
700070-0612	3/8" x 3/4"	---
700070-0806	1/2″ x 3/8″	---
700070-0808	1/2″ x 1/2″	---
700070-1006	5/8" x 3/8"	---
700070-1008	5/8″ x 1/2″	---
700070-1012	5/8" x 3/4"	----

45° ELBOW COMP X MIP

PART #	SIZE	LIST
700095-0402	1/4" x 1/8"	---
700095-0404	1/4" x 1/4"	---
700095-0604	3/8" x 1/4"	---
700095-0606	3/8" x 3/8"	---
700095-0806	1/2" x 3/8"	---
700095-0808	1/2" x 1/2"	---
700095-1008	5/8" x 1/2"	---

MALE RUN TEE COMPRESSION X MIP

LF272

PART #	SIZE	LIST
700071-0302	3/16" x 1/8"	---
700071-0402	1/4″ x 1/8″	---
700071-0404	1/4″ x 1/4″	---
700071-0502	5/16" x 1/8"	---
700071-0504	5/16" x 1/4"	---
700071-0604	3/8" x 1/4"	---
700071-0606	3/8″ x 3/8″	---
700071-0806	1/2″ x 3/8″	---

WARNING: This product can expose you to chemicals, including lead, which are known to the State of California to cause cancer and birth defects or other reproductive harm. For more information, visit www.P65Warnings.ca.gov

LEAD FREE COMPRESSION
PLUMBING

MALE BRANCH TEE COMP X MIP

PART #	SIZE	LIST
700072-0202	1/8" x 1/8"	---
700072-0302	3/16" x 1/8"	---
700072-0402	1/4″ x 1/8″	---
700072-0404	1/4″ x 1/4″	---
700072-0502	5/16" x 1/8"	---
700072-0504	5/16" x 1/4"	---
700072-0602	3/8" x 1/8"	---
700072-0604	3/8" x 1/4"	---
700072-0606	3/8″ x 3/8″	---
700072-0806	1/2″ x 3/8″	---
700072-0808	1/2″ x 1/2″	---
700072-1008	5/8″ x 1/2″	---
700072-1212	3/4" x 3/4"	----

TEE COMP X FIP X MIP

PART #	SIZE	LIST
700075-040202	1/4" x 1/8 x 1/8"	---

TEE FIP X MIP X COMP

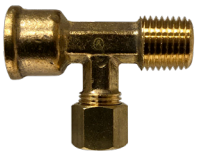

PART #	SIZE	LIST
700076-0404	1/4" x 1/4" x 1/4"	---

FEMALE BRANCH TEE COMP X FIP

PART #	SIZE	LIST
700078-0602	3/8″ x 1/8″	---
700078-0604	3/8″ x 1/4″	---
700078-0606	3/8″ x 3/8″	---
700078-1002	5/8" x 1/8"	---

FEMALE ADAPTER COMPRESSION X FEMALE FLARE

PART #	SIZE	LIST
700093-0404	1/4" x 1/4"	---

MALE ADAPTER COMPRESSION X MALE FLARE

PART #	SIZE	LIST
700094-0404	1/4" x 1/4"	---
	1/4" x 3/8"	

WARNING: This product can expose you to chemicals, including lead, which are known to the State of California to cause cancer and birth defects or other reproductive harm. For more information, visit www.P65Warnings.ca.gov

LEAD FREE COMPRESSION
PLUMBING

FEMALE ADAPTER (GASKET) FEMALE COMPRESSION X COMPRESSION

PART #	SIZE	LIST
730097-0604	3/8" x 1/4"	---
700097-0806	1/2" x 3/8"	---

FEMALE ADAPTER (GASKET) FEMALE FLARE X COMPRESSION

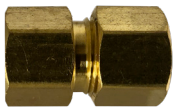

PART #	SIZE	LIST
734822-0606	9/16-24 x 3/8	---

FEMALE ADAPTER (GASKET) FE GARDEN HOSE X COMPRESSION

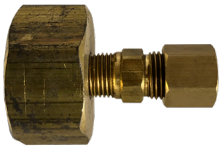

PART #	SIZE	LIST
737422-1204	3/4" x 1/4"	---
737422-1206	3/4" x 3/8"	----

LF124GH
LF125GH

SWIVEL ELBOW COMP X FE GARDEN HOSE SWIVEL

PART #	SIZE	LIST
737469-0612	3/8" x 3/4"	---

LF69GHS-162

- NO NUT & SLEEVE

LEAD FREE ADD-A-TEE COMP X COMP X SWIVEL FE COMPRESSION

PART #	M & F COMP X MALE COMP	LIST
700073-060604	3/8 x 1/4	---
700073-060606	3/8 x 3/8	---

- For adding a water line
- Ice makers, Coffee makers and instant hot water systems
- NSF Approved

WARNING: This product can expose you to chemicals, including lead, which are known to the State of California to cause cancer and birth defects or other reproductive harm. For more information, visit www.P65Warnings.ca.gov

LEAD FREE NEEDLE VALVES

PLUMBING

COMP X COMP

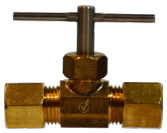

PART #	COMP X COMP	LIST
709106-04	1/4″	---
709106-05	5/16"	---
709106-06	3/8″	---

COMP X MALE PIPE

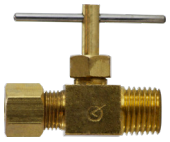

PART #	COMP X MALE PIPE	LIST
709101-0402	1/4" x 1/8"	---
709101-0404	1/4″ x 1/4″	---
709101-0604	3/8″ x 1/4″	---

COMP X MALE PIPE-ANGLE

PART #	COMP X MALE PIPE	LIST
709103-0402	1/4″ x 1/8″	---
709103-0404	1/4″ x 1/4″	---
709103-0502	5/16" x 1/8"	---
709103-0602	3/8" x 1/8"	---
709103-0604	3/8" x 1/4"	---

FLARE X FLARE

PART #	FLARE X FLARE	LIST
709110-04	1/4"	---
709110-06	3/8"	---

FLARE X MALE PIPE

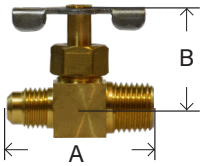

PART #	MALE FLARE X MALE PIPE	LIST
709104-0404	1/4″ x 1/4″	---

FEMALE PIPE X FEMALE PIPE

PART #	FEMALE X FEMALE	LIST
709134-02	1/8" x 1/8"	---
709134-04	1/4″ x 1/4″	---

MALE X FEMALE PIPE

PART #	FEMALE X MALE	LIST
709135-02	1/8" x 1/8"	---
709135-04	1/4″ x 1/4″	---

WARNING: This product can expose you to chemicals, including lead, which are known to the State of California to cause cancer and birth defects or other reproductive harm. For more information, visit www.P65Warnings.ca.gov

LEAD FREE NEEDLE VALVES

PLUMBING

MALE PIPE TO MALE PIPE

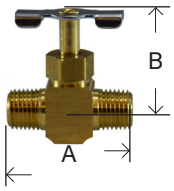

PART #	MALE PIPE X MALE PIPE	LIST
709108-04	1/4″	---

VALVE WITH TEE

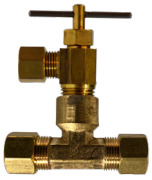

PART #	SIZE	LIST
709178-0406	1/4" x 3/8"	---
709178-0410	1/4" x 5/8"	---
709178-0606	3/8" x 3/8"	---

VALVE WITH SADDLE FITS UP TO 3/4" PIPE

PART #	SIZE	LIST
709195-04	1/4"	---
709195-05	5/16"	----
709195-06	3/8"	---

BRASS SADDLE

PART #	SIZE	LIST
709190	1/8"	---

SELF PIERCING SADDLE VALVES

PART #	DESCRIPTION	LIST
709199-04	Solid Pin	---
46090HLF	Hollow Pin	---

▪ 1/4 Tube O.D.

SELF PIERCING NEEDLE
VALVE KIT #M-104-VSP
▪ INDIVIDUALLY BAGGED
WITH NEEDLE VALVE
▪SADDLE CLAMP
▪ 2 NUTS
▪ 2 BOLTS & WASHERS
Has brass sleeve for copper tube installation & delrin sleeve & brass insert for plastic tube installation.

WARNING: This product can expose you to chemicals, including lead, which are known to the State of California to cause cancer and birth defects or other reproductive harm. For more information, visit www.P65Warnings.ca.gov

Ice Maker Kits

ICE MAKER WATER SUPPLY KIT WITH POLY TUBING

PART #	DESCRIPTION	LIST
760001	Kit	---

- Lead free fittings
- Bag with Header Card
- 25′ 1/4″ O.D. Polyethylene
- Self Piercing Saddle Valve
- 1/4″ O.D. Compression x 1/8″ MIP Elbow & Adapter
- 1/4″ O.D. Compression Union
- 1/4″ Inserts & Sleeves

ICE-MAKER WATER SUPPLY KIT

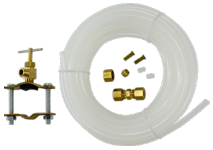

PART #	DESCRIPTION	LIST
760008	Kit	---

- Economy
- 25′ Polyethylene Tubing
- Self Piercing Saddle Valve
- 1/4″ Compression Union
- 1/4″ Inserts & Sleeves

ICE-MAKER WATER SUPPLY KIT WITH COPPER TUBING

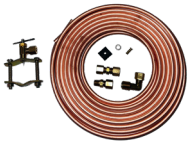

PART #	DESCRIPTION	LIST
760002	Kit	---

Self Tapping Saddle Valve
25' Copper Tubing

1/4 Compression Union
1/4 x 1/8 Compression x MIP Connector
1/4 x 1/8 Compression x MIP Elbow

ICE-MAKER WATER SUPPLY KIT WITH COPPER TUBING

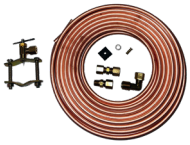

PART #	DESCRIPTION	LIST
760004	Kit	---

Self Tapping Saddle Valve
10' Copper Tubing

1/4 Compression Union
1/4 x 1/8 Compression x MIP Connector
1/4 x 1/8 Compression x MIP Elbow

ICE-MAKER WATER SUPPLY KIT WITH COPPER TUBING

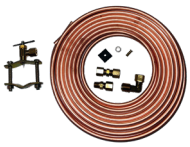

PART #	DESCRIPTION	LIST
760005	Kit	---

Self Tapping Saddle Valve
15' Copper Tubing

1/4 Compression Union
1/4 x 1/8 Compression x MIP Connector
1/4 x 1/8 Compression x MIP Elbow

WARNING: This product can expose you to chemicals, including lead, which are known to the State of California to cause cancer and birth defects or other reproductive harm. For more information, visit www.P65Warnings.ca.gov

FORGED BRASS BALL VALVE

• BRASS • 600WOG • FULL PORT

UL842, UL258, UL125,FM

ISO 9002 Manufacturer
FEATURES

Made in China

1/4-2" 600 PSI non-shock cold water, gas, oil - 150 PSI saturated steam
2-1/2"- 4" 400 PSI non-shock cold water, gas, oil

- Suitable for full range of liquids and gases
- Minimal pressure drop due to large full size ports
- Bottom loaded, pressure retaining stem
- Pressure rated for 1/4"-2" at 600psi (42 bars) and 2-1/2"-4" at 400 psi WOG (non-shock) and 150 WSP (10.34 bars) saturated steam. Virgin PTFE stem packing seal, thrust washer and seats
- Yellow vinyl insulator on heavy duty plated carbon steel handles
- Fast 1/4 turn open or close operation
- Not Lead Free
- Good for gasoline and diesel
- Low operating torque
- Adjustable stem packing gland
- Maximum operating temperature: 302^{0}F (150^0 C)
- Minimum operating temperature: -22^{0}F (-30^{0}C)
- Each valve individually tested
- Forged Brass - for more strength
- Threaded ends to ANSI B1.20.1
- Hard chromium plated solid ball
- Bottom entry, blow-out proof stem
- Deeper threads - for better connections

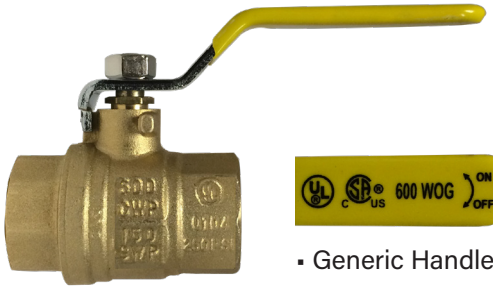

▪ Generic Handles

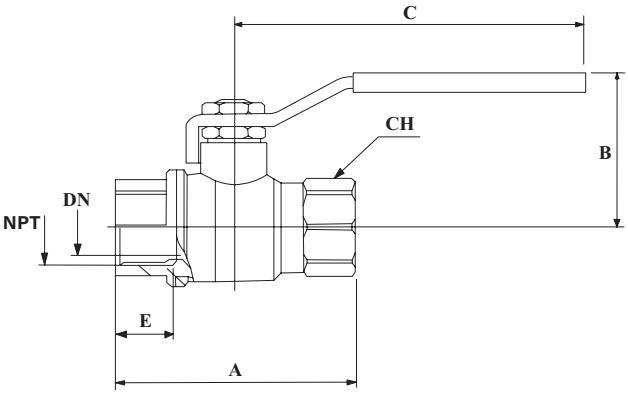

PART#	SIZE	DIMENSION INCHES						WEIGHT	BOX/CASE	LIST PRICE
	NPT	DN	A	B	C	E	CH			
940171	1/4"	0.39	1.75	1.92	3.54	0.46	0.78	0.34	70/140	---
940172	3/8"	0.41	1.75	1.92	3.54	0.46	0.78	0.30	70/140	---
940173	1/2"	0.58	2.05	2.08	3.54	0.52	0.98	0.44	50/100	---
940174	3/4"	0.75	2.36	2.30	3.78	0.56	1.20	0.67	30/60	---
940175	1"	0.94	2.75	2.68	4.52	0.66	1.50	1.05	20/40	---
940176	1-1/4"	1.26	3.30	3.14	4.52	0.70	1.82	1.50	12/24	---
940177	1-1/2"	1.57	3.66	3.61	5.51	0.72	2.09	2.30	9/18	---
940178	2"	1.97	4.18	3.68	5.51	0.74	2.62	3.38	6/12	---
940179*	2-1/2"	2.52	5.38	4.76	8.66	1.01	3.36	7.61	3/6	---
940180*	3"	2.95	6.04	5.08	8.66	1.11	3.86	11.10	2/4	---
940181*	4"	3.89	7.38	5.86	9.00	1.22	4.89	12.12	1/2	---

* 400 PSI

* Add 'H' to part # to order handles *

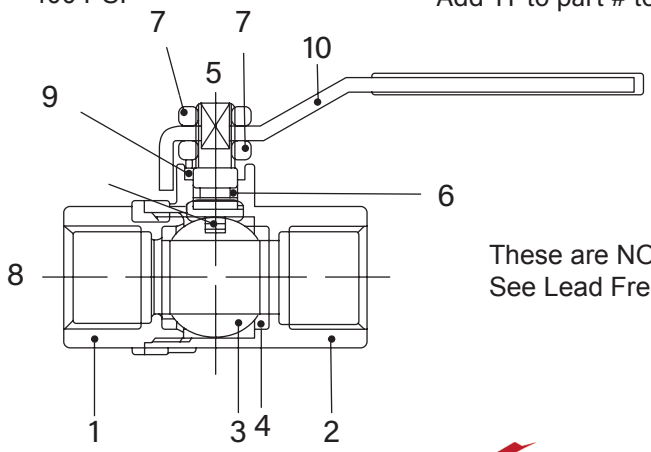

These are NOT Lead Free
See Lead Free SWT Valves

POS	COMPONENTS	MATERIALS	N
1	Body	Forged Brass	1
2	End Connection	Forged Brass	1
3	Ball	CP Brass	1
4	Ball Seat	P.T.F.E.	2
5	Stem	Brass	1
6	Gland	Brass	1
7	Nut	Steel	1
8	Spring Inseat	Steel	1
9	Stem Seal	P.T.F.E.	1
10	Handle	Steel	1

WARNING: This product can expose you to chemicals, including lead, which are known to the State of California to cause cancer and birth defects or other reproductive harm. For more information, visit www.P65Warnings.ca.gov

PLUMBING ACCESSORIES!

SUPPLY CONNECTORS

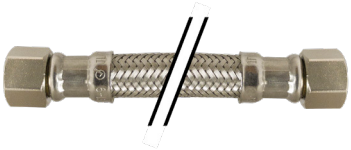

SUPPLY STOPS

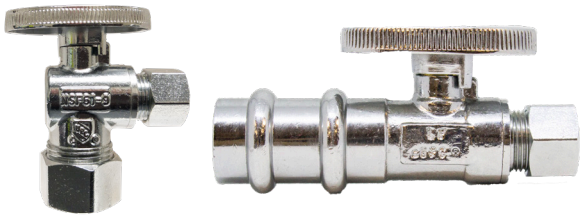

RUBBER COUPLINGS

VACUUM BREAKER

DIELECTRIC UNIONS

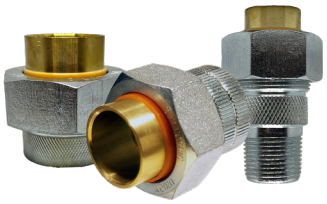

WARNING: This product can expose you to chemicals, including lead, which are known to the State of California to cause cancer and birth defects or other reproductive harm. For more information, visit www.P65Warnings.ca.gov

PLASTIC PEX ADAPTERS

PLUMBING ACCESSORIES

PEX COUPLING

PART #	SIZE	LIST PRICE
35231	1/2" Pex	
35232	3/4" Pex	
35233	1" Pex	
35235	1/2" Pex x 3/8" Pex	
35236	3/4" Pex x 1/2" Pex	
35237	1" Pex x 3/4" Pex	
35238	1" Pex x 1/2" Pex	

STD PEX TEE

PART #	SIZE	LIST PRICE
35240	3/8" Pex	
35241	1/2" Pex	
35243	3/4" Pex	
35244	1" Pex	
35246	1/2" Pex x 3/4" Pex	
35247	3/4" Pex x 1/2" Pex x 1/2" Pex	
35248	3/4" Pex x 1/2" Pex x 3/4" Pex	
35249	3/4" Pex x 3/4" Pex x 1/2" Pex	
35250	3/4" Pex x 3/4" Pex x 1" Pex	
35251	1" Pex x 3/4" Pex x 3/4" Pex	
35252	1" Pex x 1" Pex x 1/2" Pex	
35253	1" Pex x 1" Pex x 3/4" Pex	
35254	1" Pex x 3/4" Pex x 1" Pex	

PEX ELBOW

PART #	SIZE	LIST PRICE
35257	3/8" Pex	
35258	1/2" Pex	
35260	3/4" Pex	
35261	1" Pex	
35259	3/4" Pex x 1/2" Pex	

STD PEX X FEMALE NPT ADAPTER

PART #	SIZE	LIST PRICE
35263	1/2" Pex x 1/2" Female NPT	
36264	3/4" Pex x 3/4" Female NPT	
36265	1" Pex x 1" Female NPT	

STD PEX X FEMALE NPSM ADAPTER

PART #	SIZE	LIST PRICE
35268	3/8" Pex x 1/2" Female NPSM	
36269	1/2" Pex x 1/2" Female NPSM	
35270	1/2" Pex x 3/4" Female NPSM	
35271	3/4" Pex x 3/4" Female NPSM	
35272	3/4" Pex x 3/4" Female NPSM	

WARNING: This product can expose you to chemicals, including lead, which are known to the State of California to cause cancer and birth defects or other reproductive harm. For more information, visit www.P65Warnings.ca.gov

PLASTIC PEX ADAPTERS

PLUMBING ACCESSORIES

STD PEX X MALE NPT ADAPTER

PART #	SIZE	LIST PRICE
35276	1/2" Pex x 1/2" Male NPT	
35278	1/2" Pex x 3/4" Male NPT	
35279	3/4" Pex x 1/2" Male NPT	
35280	3/4" Pex x 3/4" Male NPT	
35281	1" Pex x 1" Male NPT	

PEX MALE ELBOW

PART #	SIZE	LIST PRICE
35284	1/2" Pex x 3/8" Male	
35285	1/2" Pex x 1/2" Male	
35286	3/4" Pex x 1/2" Male	
35287	3/4" Pex x 3/4" Male	

PEX FEMALE NPSM ELBOW

PART #	SIZE	LIST PRICE
35273	1/2" Pex x 1/2" Female NPSM Elbow	

PEX TEE

PART #	SIZE	LIST PRICE
35242	1/2" Pex x 1/2" Pex x 1/2" Male	

PEX PLUG

PART #	SIZE	LIST PRICE
35290	1/2" Pex	
35291	3/4" Pex	
35292	1" Pex	

HEX NIPPLE

PART #	SIZE	LIST PRICE
35277	1/2" Male Pipe x 1/2" Male Pipe	

PEX CLAMP

PART #	SIZE	LIST PRICE
35210	1/2"	
35211	3/4"	
35212	1"	

WARNING: This product can expose you to chemicals, including lead, which are known to the State of California to cause cancer and birth defects or other reproductive harm. For more information, visit www.P65Warnings.ca.gov

LEAD FREE BRASS PEX FITTINGS & ADAPTERS

PLUMBING ACCESSORIES

MALE ADAPTER

Pex x Male Pipe

PART #	SIZE	LIST PRICE
35076	1/2″ x 1/2″	
35078	1/2″ x 3/4″	
35079	3/4″ x 1/2″	
38080	3/4″ x 3/4″	
35082	3/4″ x 1″	
35083	1″ x 3/4″	
35081	1″ x 1″	

FEMALE ADAPTER

Pex X Female Pipe

PART #	SIZE	LIST PRICE
35062	1/2″ x 3/4″	
35063	1/2″ x 1/2″	
35064	3/4″ x 3/4″	
35065	1″ x 1″	

MALE SWEAT ADAPTER

Pex X Male Sweat

PART #	SIZE	LIST PRICE
35076S	1/2″ x 1/2″	
35080S	3/4″ x 3/4″	
35081S	1″ x 1″	

FEMALE SWEAT ADAPTER

Pex X Female Sweat

PART #	SIZE	LIST PRICE
35063S	1/2″ x 1/2″	
35064S	3/4″ x 3/4″	
35065S	1″ x 1″	

WARNING: This product can expose you to chemicals, including lead, which are known to the State of California to cause cancer and birth defects or other reproductive harm. For more information, visit www.P65Warnings.ca.gov

LEAD FREE BRASS PEX ADAPTERS

PLUMBING ACCESSORIES

COUPLING

Pex X Pex

PART #	SIZE	LIST PRICE
35030	3/8″	
35035	1/2″ x 3/8″	
35031	1/2″	
35036	3/4″ x 1/2″	
35032	3/4″	
35037	1″ x 3/4″	
35033	1″	

UNION ELBOW

Pex X Pex

PART #	SIZE	LIST PRICE
35057	3/8″	
35058	1/2″	
35059	3/4″ x 1/2″	
35060	3/4″	
35061	1″	

UNION TEE

Pex X Pex X Pex

PART #	SIZE	LIST PRICE
35040	3/8″	
35041	1/2″	
35043	3/4″	
35044	1″	

REDUCING UNION TEE

Pex X Pex X Pex

PART #	SIZE	LIST PRICE
35046	1/2″ x 1/2″ x 3/4″	
35047	3/4″ x 1/2″ x1/2″	
35048	3/4″ x 1/2″ x 3/4″	
35049	3/4″ x 3/4″ x 1/2″	
35050	3/4″ x 3/4″ x 1″	
35051	1″ x 3/4″ x 3/4″	
35052	1″ x 1″ x 1/2″	
35053	1″ x 1″ x 3/4″	
35054	1″ x 3/4″ x 1″	

WARNING: This product can expose you to chemicals, including lead, which are known to the State of California to cause cancer and birth defects or other reproductive harm. For more information, visit www.P65Warnings.ca.gov

LEAD FREE BRASS PEX ADAPTERS

PLUMBING ACCESSORIES

MALE ELBOW

Pex X Male Pipe

PART #	SIZE	LIST PRICE
35085	1/2″ x 1/2″	
35086	3/4″ x 1″	

POLYBUTYLENE ADAPTER

Pex X Polyb W/ Copper And Poly Rings

PART #	SIZE	LIST PRICE
35031PB	1/2″ x 1/2″	
35032PB	3/4″ x 3/4″	

DROP EAR ELBOW

Pex X Female Pipe

PART #	SIZE	LIST PRICE
35095	1/2″ x 1/2″	
35096	3/4″ x 3/4″	

FEMALE SWEAT ELBOW

Pex X Female Sweat

PART #	SIZE	LIST PRICE
35073S	1/2″ x 1/2″	
35074S	3/4″ x 3/4″	

PLUG

Pex

PART #	SIZE	LIST PRICE
35090	1/2″	
35091	3/4″	
35092	1″	

WARNING: This product can expose you to chemicals, including lead, which are known to the State of California to cause cancer and birth defects or other reproductive harm. For more information, visit www.P65Warnings.ca.gov

SUPPLY STOPS/ SS SUPPLY CONNECTORS

PLUMBING ACCESSORIES

SUPPLY STOPS - 1/4 TURN

- 100% Pressure Leak Tested
- High Performance Teflon Seats
- Individually Boxed
- Conventional Oval Handle Design
- Meets or Exceeds ASME A112.18.1

angle stops

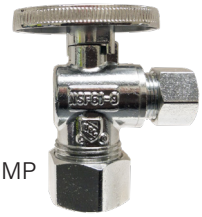

3/8" COMP

5/8" COMP

PART #	X 3/8 COMPRESSION	LIST PRICE
746456	5/8 Compression	---

PART #	X 3/8 COMPRESSION	LIST PRICE
746457	5/8 Compression Contractor Pack bagged less 3/8" Nut & Ferrule 10/Box	---

3/8" COMP

3/8" OR 1/2" FIP

PART #	X 3/8 COMPRESSION	LIST PRICE
746436	3/8 Female Iron Pipe	---
746446	1/2 Female Iron Pipe	---

3/8" COMP

1/2" SWEAT

PART #	X 3/8 COMPRESSION	LIST PRICE
746466	LF 1/2 Nominal Sweat	---

3/8" COMP

1/2" COLD EXPANSION

PART #	X 3/8 COMPRESSION	LIST PRICE
746435	1/2 C/E Pex	---

3/8" COMP

1/2" PEX

PART #	X 3/8 COMPRESSION	LIST PRICE
746438	1/2 Nominal Pex	---

press fit

3/8" COMP

1/2" PRESS

PART #	X 3/8 COMPRESSION	LIST PRICE
746470	1/2 Press	

3 way stops

3/8"

1/4" OR 3/8"

5/8"

PART #	DESCRIPTION	LIST PRICE
746439	LF 5/8 Compression x 3/8 Compression x 1/4 Compression	---
746440	LF 5/8 Compression x 3/8 Compression x 3/8 Compres-sion	---

WARNING: This product can expose you to chemicals, including lead, which are known to the State of California to cause cancer and birth defects or other reproductive harm. For more information, visit www.P65Warnings.ca.gov

SUPPLY STOPS/ SS SUPPLY CONNECTORS

PLUMBING ACCESSORIES

straight stops

3/8" COMP OR 5/8" COMP

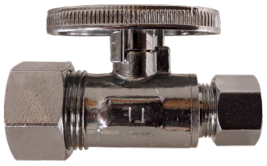

3/8" COMP

PART #	X 3/8 COMPRESSION	LIST PRICE
746506	3/8 Compression	---
746556	5/8 Compression	---

3/8" COMP

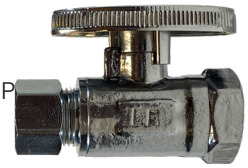

3/8" FIP OR 1/2 FIP

PART #	X 3/8 COMPRESSION	LIST PRICE
746536	3/8 Female Iron Pipe	---
746546	1/2 Female Iron Pipe	---

3/8" COMP

1/2" SWEAT

PART #	X 3/8 COMPRESSION	LIST PRICE
746566	1/2 Nominal Sweat	---

3/8" COMP

1/2" COLD EXPANSION PEX

PART #	X 3/8 COMPRESSION	LIST PRICE
746535	1/2 C/E Pex	---

3/8" COMP

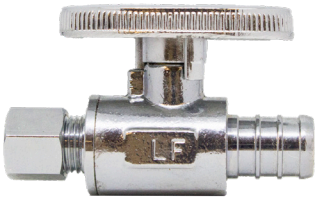

1/2" PEX

PART #	X 3/8 COMPRESSION	LIST PRICE
746538	1/2 Nominal Pex	---

1/4" COMP

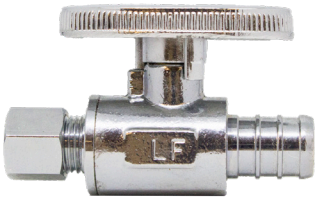

1/2" PEX

PART #	X 1/4 COMPRESSION	LIST PRICE
746537	1/2 Nominal Pex	---

3/8" COMP

1/2" SOCKET CPVC

PART #	X 3/8 COMPRESSION	LIST PRICE
746567	1/2 Socket CPVC	---

press fit stops

1/2" PRESS

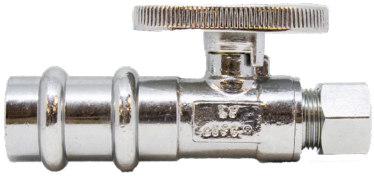

3/8" COMP

PART #	X 3/8 COMPRESSION	LIST PRICE
746570	1/2" Press	

WARNING: This product can expose you to chemicals, including lead, which are known to the State of California to cause cancer and birth defects or other reproductive harm. For more information, visit www.P65Warnings.ca.gov

SS SUPPLY CONNECTORS

PLUMBING ACCESSORIES

LEAD FREE

AB1953/S.152
COMPLIANT

Meets S.3874/ Public Law No. 111-380
Reduction of Lead in Drinking Water Act

CONNECTORS

- Precision 12 Point Crimp
- Heavy duty Brass Inserts
- Chloramine/ Chlorine Resistant Inner Liner

LAVATORY

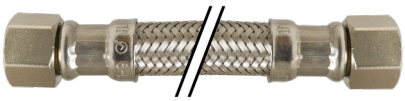

3/8 COMPRESSION X 3/8 COMPRESSION

PART #	LENGTH	LIST PRICE
922012	12"	---
922016	16"	---
922020	20"	---
922030	30"	---
922036	36"	---

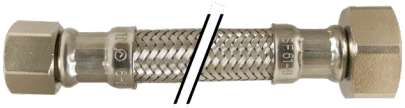

3/8 COMPRESSION X 1/2 FEMALE IRON PIPE

922112	12"	---
922116	16"	---
922120	20"	---
922130	30"	---
922136	36"	---

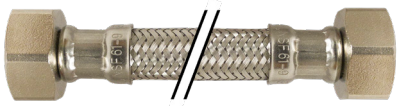

1/2 FEMALE IRON PIPE X 1/2 FEMALE IRON PIPE

922412	12"	---
922416	16"	---
922420	20"	---
922430	30"	---
922436	36"	---

NEW WITH BRASS NUT

BALLCOCK

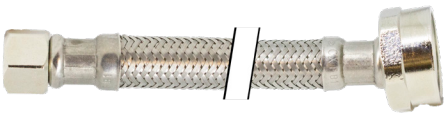

3/8 COMPRESSION X 7/8 BALLCOCK

923409	9"	---
923412	12"	---
923416	16"	---
923420	20"	---

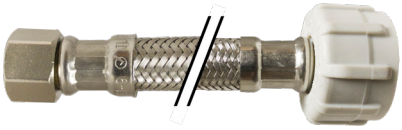

3/8 COMPRESSION X 7/8 BALLCOCK

923209	9"	---
923212	12"	---
923216	16"	---
923220	20"	---

WARNING: This product can expose you to chemicals, including lead, which are known to the State of California to cause cancer and birth defects or other reproductive harm. For more information, visit www.P65Warnings.ca.gov

SS SUPPLY CONNECTORS

PLUMBING ACCESSORIES

- Marine Grade Stainless Steel Braid
- Precision 12 Point Crimp
- Heavy duty Brass Inserts
- Chloramine/ Chlorine Resistant Inner Liner

LEAD FREE

AB1953/S.152
COMPLIANT

Meets S.3874/ Public Law No. 111-380 Reduction of Lead in Drinking Water Act

ICE MAKER

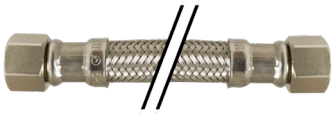

1/4 COMPRESSION X 1/4 COMPRESSION

PART #	LENGTH	LIST PRICE
923112	12"	---
923124	24"	---
923136	36"	
923148	48"	
923161	60"	
923172	72"	
923196	96"	---

DISHWASHER

3/8 COMPRESSION X 3/8 COMPRESSION

922009	9"	---
922012	12"	---
922024	24"	
922030	30"	---
922036	36"	---
922048	48"	---
922060	60"	---
922072	72"	---
922096	96"	---

3/8 COMPRESSION X 3/8 MALE IRON PIPE ELBOW

PART #	L	LIST PRICE
923648	48"	
923660	60"	---
923672	72"	---

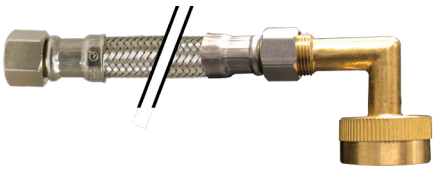

3/8 COMPRESSION X 3/4 FEMALE GARDEN HOSE ELBOW

924248	48"	
924260	60"	---
924272	72"	---

WASHING MACHINE

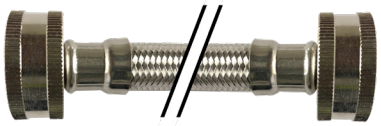

3/4 FEMALE GARDEN HOSE X 3/4 FEMALE GARDEN HOSE

923936	36"	---
923948	48"	---
923960	60"	---
923972	72"	---

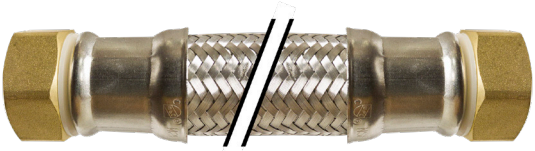

3/4 FEMALE IRON PIPE X 3/4 FEMALE IRON PIPE

924115	12"	---
924118	18"	---
924124	24"	---

WARNING: This product can expose you to chemicals, including lead, which are known to the State of California to cause cancer and birth defects or other reproductive harm. For more information, visit www.P65Warnings.ca.gov

POWER CABLES

PLUMBING ACCESSORIES

Cords are designed to fit with special environment use, such as:
range and dryer, RV, generators and marine shore.

- UL Listed
- ETL Listed
- Copper Wire Insulated, Flexible cord
- Thick PVC insulation with right angle male plugs
- Strain relief clamp helps prevent damage

3 WIRE RANGE CORDS

PART #	DESCRIPTION	LIST PRICE
P-4RC-3W-40A-CE	4′ 40AMP Closed Eyelet	
P-5RC-3W-40A-CE	5′ 40AMP Closed Eyelet	
P-6RC-3W-40A-CE	6′ 40AMP Closed Eyelet	
P-4RC-3W-50A-CE	4′ 50AMP Closed Eyelet	
P-5RC-3W-50A-CE	5′ 50AMP Closed Eyelet	
P-6RC-3W-50A-CE	6′ 50AMP Closed Eyelet	
P-10RC-3W-50A-CE	10′ 50AMP Closed Eyelet	

3 WIRE DRYER CORDS

PART #	DESCRIPTION	LIST PRICE
P-4DC-3W-30A-CE	4′ 30AMP Closed Eyelet	
P-5DC-3W-30A-CE	5′ 30AMP Closed Eyelet	
P-6DC-3W-30A-CE	6′ 30AMP Closed Eyelet	
P-10DC-3W-30A-CE	10′ 30AMP Closed Eyelet	

4 WIRE RANGE CORDS

PART #	DESCRIPTION	LIST PRICE
P-4RC-4W-40A-CE	4′ 40AMP Closed Eyelet	
P-5RC-4W-40A-CE	5′ 40AMP Closed Eyelet	
P-6RC-4W-40A-CE	6′ 40AMP Closed Eyelet	
P-4RC-4W-50A-CE	4′ 50AMP Closed Eyelet	
P-5RC-4W-50A-CE	5′ 50AMP Closed Eyelet	
P-6RC-4W-50A-CE	6′ 50AMP Closed Eyelet	
P-10RC-4W-50A-CE	10′ 50AMP Closed Eyelet	

WARNING: This product can expose you to chemicals, including lead, which are known to the State of California to cause cancer and birth defects or other reproductive harm. For more information, visit www.P65Warnings.ca.gov

4 WIRE DRYER CORDS

PART #	DESCRIPTION	LIST PRICE
P-4DC-4W-30A-CE	4′ 30AMP Closed Eyelet	
P-5DC-4W-30A-CE	5′ 30AMP Closed Eyelet	
P-6DC-4W-30A-CE	6′ 30AMP Closed Eyelet	
P-10DC-4W-30A-CE	10′ 30AMP Closed Eyelet	

DISHWASHER POWER CORDS

PART #	DESCRIPTION	LIST PRICE
P-3DISH-PC-AP	3′ 15AMP 125V 14/3	
P-6DISH-PC-AP	6′ 15AMP 125V 14/3	
P-3DISH-PC-SP	4′ 15AMP 125V 14/3	
P-6DISH-PC-SP	6′ 15AMP 125V 14/3	

POWER SUPPLY CORDS

PART #	DESCRIPTION	LIST PRICE
P-3PSC-3W-13A-AP	3′ 13AMP 16/3 Angled	
P-6PSC-3W-13A-AP	6′ 13AMP 16/3 Angled	
P-3PSC-3W-13A-SP	3′ 13AMP 16/3 Straight	
P-6PSC-3W-13A-SP	6′ 13AMP 16/3 Straight	

APPLIANCE EXTENSION CORDS

PART #	DESCRIPTION	LIST PRICE
P-3AEC	3′ A/C 14/3	
P-6AEC	6′ A/C 14/3	

WARNING: This product can expose you to chemicals, including lead, which are known to the State of California to cause cancer and birth defects or other reproductive harm. For more information, visit www.P65Warnings.ca.gov

TRANSITION FITTINGS

PLUMBING ACCESSORIES

BRASS CPVC MALE ADAPTER

PART#	SIZE	LIST PRICE
35413LF	1/2"	---
35414LF	3/4"	---
35415LF	1"	---
35416LF	1-1/4"	---
35417LF	1-1/2"	---
35418LF	2	---

STAINLESS STEEL CPVC MALE ADAPTER

PART#	SIZE	LIST PRICE
35413SS	1/2"	---
35414SS	3/4"	---
35415SS	1"	---
35416SS	1-1/4"	---
35417SS	1-1/2"	---
35418SS	2	---

BRASS CPVC FEMALE ADAPTER

PART#	SIZE	LIST PRICE
35403LF	1/2"	---
35404LF	3/4"	---
35405LF	1"	---
35406LF	1-1/4"	---
35407LF	1-1/2"	---
35408LF	2	---

STAINLESS STEEL CPVC FEMALE ADAPTER

PART#	SIZE	LIST PRICE
35403SS	1/2"	---
35404SS	3/4"	---
35405SS	1"	---
35406SS	1-1/4"	---
35407SS	1-1/2"	---
35408SS	2	---

LEAD FREE CPVC DROP EAR ELBOW

PART#	SIZE	LIST PRICE
35420LF	1/2"	---

STAINLESS STEEL CPVC DROP EAR ELBOW

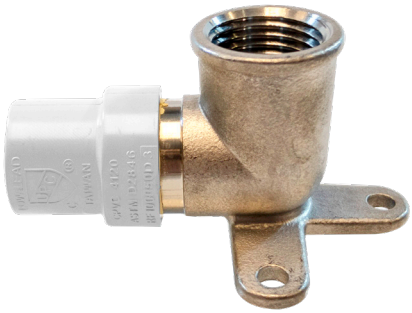

PART#	SIZE	LIST PRICE
35420SS	1/2"	---

WARNING: This product can expose you to chemicals, including lead, which are known to the State of California to cause cancer and birth defects or other reproductive harm. For more information, visit www.P65Warnings.ca.gov

LEAD FREE OVAL WATER METER FLANGE OVAL

PART#	SIZE	CASE	LIST PRICE
970207	1-1/2"	32	---
970208	2"	48	---

LEAD FREE OVAL WATER METER KIT

W/ BOLT & NUT STAINLESS STEEL

NO	PART	MATERIALS	QTY	WATER CONTACT
1	BOLT	SS 304	4	N
2	FLANGE	BRASS LEAD FREE	2	Y
3	PACKING	RUBBER	2	Y
4	NUT	SS 304	4	N

PART#	SIZE	CASE	LIST PRICE
970227	1-1/2"	32	---
970228	2"	48	---

LEAD FREE OVAL METER FLANGE KIT

W/ BOLT & NUT STAINLESS STEEL (NO LEAD)

NO	PART	MATERIALS	QTY	WATER CONTACT
1	BOLT	SS 304	2	N
2	FLANGE	BRASS LEAD FREE	1	Y
3	PACKING	RUBBER	1	Y
4	NUT	SS 304	2	N

PART#	SIZE	CASE	LIST PRICE
970217	1-1/2"	12	---
970218	2"	10	---

LEAD FREE BRASS METER COUPLING

PART#	SIZE	CASE	LIST PRICE
970253	1/2"	100	---
970254	3/4"	100	---
970255	1"	80	---
970257	1-1/2"	24	---
970258	2"	24	---

WARNING: This product can expose you to chemicals, including lead, which are known to the State of California to cause cancer and birth defects or other reproductive harm. For more information, visit www.P65Warnings.ca.gov

FLEXIBLE RUBBER COUPLINGS
PLUMBING ACCESSORIES

FLEXIBLE RUBBER COUPLINGS / REDUCED COUPLINGS

Midland's stainless steel banded flexible rubber couplings are the perfect fit for Schedule 40 pipe applications.

Tech Specs:
- Installation torque: 60 inch lbs.
- Maximum test pressure: 4.3 PSI
- Maximum operating temperature: 140° F non-consistent
- Minimum operating temperature: -30° F

- Corrosion-resistant & rustproof stainless steel bands
- Durable Rubber for all Sch. 40 Pipe Applications
- Positive seal against infiltration and exfiltration
- Conforms to ASTM C 1173 and CSA B602
- Sizes 1-1/4" - 6" regular & reducing
- UPC Approved

COUPLING

REDUCING COUPLING

PART #	SIZE	LIST
195456	1-1/4"	
195470	1-1/2" x 1-1/4"	
195457	1-1/2"	
195471	2" x 1/2"	
195458	2"	
195472	3" x 1-1/2"	
195473	3" x 2"	
195459	3"	
195474	4" x 1-1/2"	
195475	4" x 2"	
195476	4" x 3"	
195460	4"	
195461	5"	
195481	6" x 4"	
195462	6"	

TEST CAPS

PART #	SIZE	LIST
195502	1-1/2"	
195510	2"	
195511	3"	
195512	4"	

DRAIN & TRAP CONNECTORS

PART #	SIZE	LIST
195520	1-1/2" x 1-1/4"	
195521	2" x 1-1/4"	

WARNING: This product can expose you to chemicals, including lead, which are known to the State of California to cause cancer and birth defects or other reproductive harm. For more information, visit www.P65Warnings.ca.gov

LF DIELECTRIC UNION

PLUMBING ACCESSORIES

Forged steel with brass sweat connector and dielectric element.

PURPOSE

The 110 series are used to protect against the accelerated galvanic and stray current corrosion of dissimilar metal pipes, connected together in a piping system. Dielectric fittings are a necessity to insure the long life of these systems.

APPLICATIONS

For residential, commercial and industrial use. Hot water storage tanks, Water and Air Conditioners, Processing tanks.

PROCESSING

Bodies and nuts are made of AISI 1008A bar-carbon steel and are shaped by cold forging with spheroidizing to eliminate any flaws.

TECHNICAL DATA

All DF-100 series dielectric fittings are rated at 250 psi at 180°F and are designed to withstand a minimum of 600 volts on a dry line with no flashover.

FEMALE PIPE X SWEAT

Zinc Coated Cast Steel X Brass

PART #	SIZE	LIST PRICE
973-110LF	1/2"CC X 1/2" FIP	
973-111LF	3/4"CC X 3/4"FIP	
973-112LF	1/2"CC X 3/4"FIP	
973-116LF	1"CC X 1"FIP	
973-117LF	1-1/4"CC X 1-1/4"FIP	
973-118LF	1-1/2"CC X 1-1/2"FIP	
973-119LF	2"CC X 2"FIP	

MALE PIPE X SWEAT

Zinc Coated Cast Steel X Brass

PART #	SIZE	LIST PRICE
973-113LF	1/2" CC X 1/2" MALE IP	
973-114LF	3/4" CC X 3/4" MALE IP	

FEMALE PIPE X SWEAT - FLANGE

Zinc Coated Cast Steel X Brass

PART #	SIZE	LIST PRICE
973-120LF	2-1/2" CC X 2-1/2"FIP	
973-121LF	3"CC X 3"FIP	
973-122LF	4"CC X 4"FIP	

WARNING: This product can expose you to chemicals, including lead, which are known to the State of California to cause cancer and birth defects or other reproductive harm. For more information, visit www.P65Warnings.ca.gov

IRON BODY CLEANOUT PLUGS

PLUMBING ACCESSORIES

CAST BRASS SQUARE HEAD CLEANOUT PLUG

- Southern Code

PART #	SIZE	BOX/CASE	LIST PRICE
970300	1-1/2"	100/200	---
970301	2"	100/200	---
970302	2-1/2"	50/200	---
970303	3"	20/160	---
970304	3-1/2"	20/120	---
970305	4"	10/80	---
970330	5"	10/60	---
970331	6"	10/40	---
970332	8"	5/20	---
970333	10"	1/1	---

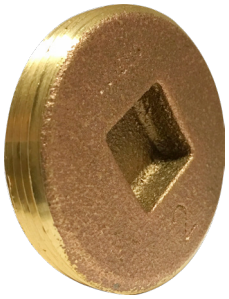

CAST BRASS COUNTERSUNK HEAD CLEANOUT PLUG

- Southern Code

PART #	SIZE	BOX/CASE	LIST PRICE
970306	1-1/2"	100/200	---
970307	2"	100/200	---
970308	2-1/2"	100/200	---
970309	3"	50/200	---
970310	3-1/2"	20/160	---
970311	4"	20/120	---
970312	5"	10/60	---
970313	6"	10/40	---
970314	8"	5/20	---

CAST BRASS COUNTERSUNK CLEANOUT W 1/4-20 TAP

PART #	SIZE	BOX/CASE	LIST PRICE
970700	1-1/2"	1/1	---
970701	2"	1/1	---
970702	2-1/2"	1/1	---
970703	3"	1/1	---
970704	3-1/2"	1/1	---
970705	4"	1/1	---
970706	5"	1/1	---
970707	6"	1/1	---

IBC IRON BODY CLEANOUT PLUG

PART #	SIZE	LIST PRICE
970803CS	4x3 Iron Body Cleanout W/CNTRSunk Plug	
970804CS	4x3-1/2 Iron Body Cleanout W/CNTRSunk Plug	
970806CS	6x5 Iron Body Cleanout W/CNTRSunk Plug	

IBC IRON BODY CLEANOUT PLUG

PART #	SIZE	LIST PRICE
970803RH	4x3 Iron Body Cleanout W/RH Brass Plug	
970804RH	4x3-1/2 Iron Body Cleanout W/RH Brass Plug	
970806RH	6x5 Iron Body Cleanout W/RH Brass Plug	

WARNING: This product can expose you to chemicals, including lead, which are known to the State of California to cause cancer and birth defects or other reproductive harm. For more information, visit www.P65Warnings.ca.gov

SLIP SCHEDULE 80 PVC UNION

PART #	SIZE	LIST PRICE
897005	1/2″	
897007	3/4″	
897010	1″	
897012	1-1/4″	
897015	1-1/2″	
897020	2″	
897025	2-1/2″	
897030	3″	
897040	4″	

FIP SCHEDULE 80 PVC UNION

PART #	SIZE	LIST PRICE
898005	1/2″	
898007	3/4″	
898010	1″	
898012	1-1/4″	
898015	1-1/2″	
898020	2″	
898025	2-1//2″	
898030	3″	
898040	4″	

SLIP SCHEDULE 40 PVC UNION

PART #	SIZE	LIST PRICE
55491	1/2″	
55492	3/4″	
55493	1″	
55494	1-1/4″	
55495	1-1/2″	
55496	2″	
55497	3″	
55498	4″	
55499	2-1/2″	

FIP SCHEDULE 40 PVC UNION

PART #	SIZE	LIST PRICE
55591	1/2″	
55592	3/4″	
55593	1″	
55594	1-1/4″	
55595	1-1/2″	
55596	2″	
55597	3″	
55598	4″	
55599	2-1/2″	

PVC COMPRESSION COUPLING

PART #	SIZE	LIST PRICE
55303	1/2″	
55304	3/4″	
55305	1″	
55306	1-1/4″	
55307	1-1/2″	
55308	2″	
55309	2-1/2″	
55310	3″	
55311	4″	
55312	6″	

PVC EXPANDABLE REPAIR COUPLING

PART #	SIZE	LIST PRICE
55330	1/2″	
55331	3/4″	
55332	1″	
55333	1-1/4″	
55334	1-1/2″	
55335	2″	
55336	2-1/2″	
55337	3″	
55338	4″	

WARNING: This product can expose you to chemicals, including lead, which are known to the State of California to cause cancer and birth defects or other reproductive harm. For more information, visit www.P65Warnings.ca.gov

SCHEDULE 80 PVC NIPPLES

Machined Schedule 80 PVC nipples comply fully with ASTM D2464, threads conform to ASTM F1498, and the pipe is extruded from PVC 1120-1220 meeting ASTM D1784 and meets ASTM D1785, products standard 21-70

- Dark Grey
- NSF-61 Cert.

1/2" DIAMETER 420 PSI

PART #	LENGTH	LIST PRICE
55060	X Close (1-1/8")	---
55061	1-1/2"	---
55062	2"	---
55063	2-1/2"	---
55064	3"	---
55065	3-1/2"	---
55066	4"	---
55067	4-1/2"	---
55068	5"	---
55069	5-1/2"	---
55070	6"	---
55072	8"	---
55074	10"	---
55075	11"	---
55076	12"	---
	18"	---
55241	24"	---

3/4" DIAMETER 340 PSI

PART #	LENGTH	LIST PRICE
55080	x Close (1-3/8")	---
55081	1-1/2"	---
55082	2"	---
55083	2-1/2"	---
55084	3"	---
55085	3-1/2"	---
55086	4"	---
55087	4-1/2"	---
55088	5"	---
55089	5-1/2"	---
55090	6"	---
55092	8"	---
55093	10"	---
55096	12"	---
55097	18"	---
55098	24"	---

1" DIAMETER 315 PSI

PART #	LENGTH	LIST PRICE
55100	X Close (1-1/2")	---
55101	2"	---
55102	2-1/2"	---
55103	3"	---
55104	3-1/2"	---
55105	4"	---
55106	4-1/2"	---
55107	5"	---
55108	5-1/2"	---
55109	6"	---
55111	8"	---
55115	12"	---
55116	18"	---
55117	36"	---

1-1/4" DIAMETER 210 PSI

PART #	LENGTH	LIST PRICE
55120	X Close (1-5/8")	---
55121	2"	---
55122	2-1/2"	---
55123	3"	---
55124	3-1/2"	---
55125	4"	---
55126	4-1/2"	---
55127	5"	---
55128	5-1/2"	---
55129	6"	---
55132	12"	---

WARNING: This product can expose you to chemicals, including lead, which are known to the State of California to cause cancer and birth defects or other reproductive harm. For more information, visit www.P65Warnings.ca.gov

PLASTIC PIPE

PLUMBING ACCESSORIES

1-1/2" DIAMETER 234 PSI

PART #	LENGTH	LIST PRICE
55140	X Close (1-5/8")	---
55141	2"	---
55142	2-1/2"	---
55143	3"	---
55144	3-1/2"	---
55145	4"	---
55146	4-1/2"	---
55147	5"	---
55148	5-1/2"	---
55149	6"	---
55150	8"	---
55151	12"	---

2" DIAMETER 200 PSI

PART #	LENGTH	LIST PRICE
55160	X Close (2")	---
55161	2-1/2"	---
55162	3"	---
55163	3-1/2"	---
55164	4"	---
55165	4-1/2"	---
55166	5"	---
55167	5-1/2"	---
55168	6"	---
55170	8"	---
55174	12"	---
55179	60"	---

3" DIAMETER

PART #	LENGTH	BOX QTY	LIST PRICE
55200	x Close	25	---
55201	3"	20	---
55203	4"	30	---
55205	5"	20	---
55207	6"	20	---
55209	8"	10	---
55211	10"	10	---
55213	12"	10	---

WARNING: This product can expose you to chemicals, including lead, which are known to the State of California to cause cancer and birth defects or other reproductive harm. For more information, visit www.P65Warnings.ca.gov

BRONZE/ STEEL INSERT FITTINGS-FOR PLASTIC PIPE

PLUMBING ACCESSORIES

BRONZE INSERT FITTINGS

150 PSI Genuine red brass - for plastic pipe

- Not Lead Free

HEX MALE ADAPTERS

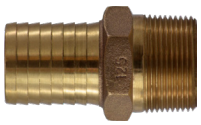

(BARB X MALE PIPE)

PART #	BARB X MALE	LIST PRICE
973925	3/4" x 3/4"	---
973927	1" x 1"	---
973930	1" x 1-1/4"	---
973929	1-1/4" x 1"	---
973928	1-1/4" x 1-1/4"	---
973948	1-1/2" x 1-1/2"	---
973949	2" x 2"	---

BRONZE TEES ALL BARB

PART #	SIZE	LIST PRICE
973965	3/4"	---
973966	1"	---
973967	1-1/4"	---

ELBOWS

(BARB X MALE PIPE)

PART #	SIZE	LIST PRICE
973980	3/4" x 3/4"	---
973981	1" x 3/4"	---
973982	1" x 1"	---

ELBOWS

(BARB X BARB)

PART #	HOSE SIZE	LIST PRICE
973975	3/4"	---
973976	1"	---
973978	1-1/4"	---
973979	1-1/2"	---

STEEL INSERT FITTINGS FOR PLASTIC PIPE

MALE ADAPTER

- Galvanized

(BARB X MALE PIPE)

PART #	SIZE	BOX/CASE	LIST PRICE
973906	1/2"	25/100	---
973907	3/4"	25/10	---
973908	1"	16/48	---
973909	1-1/4"	12/36	---
973910	1-1/2"	6/36	---
973911	2"	5/25	---
973912	2-1/2"	1/3	---
973913	3"	1/3	---
973914	4"	1/3	---

REDUCING ADAPTER

(INSERT X NPT)

PART #	SIZE	LIST PRICE
974264	3/4 x 1/2	---
974265	1 x 3/4	---

COUPLINGS

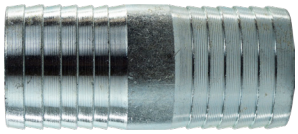

PART #	SIZE	BOX/CASE	LIST PRICE
973901	3/4	20/100	---
973902	1	20/100	---
973903	1-1/4	16/64	---
973904	1-1/2	12/48	---
973905	2	5/25	---

SEE KNOWLEDGE BANK
FOR DIMENSIONS

WARNING: This product can expose you to chemicals, including lead, which are known to the State of California to cause cancer and birth defects or other reproductive harm. For more information, visit www.P65Warnings.ca.gov

SS AND LEAD FREE BRONZE INSERT-FOR PLASTIC PIPE

PLUMBING ACCESSORIES

stainless steel #304

#304 INSERT X MALE PIPE

- For coiled plastic pipe to submersible pump

PART #	SIZE	LIST PRICE
973947SS	1/2 x 1/2	---
973925SS	3/4 x 3/4	---
973926SS	1 x 3/4	---
973927SS	1 x 1	---
973930SS	1 x 1-1/4	---
973928SS	1-1/4 x 1-1/4	---
973948SS	1-1/2 x 1-1/2	---
973949SS	2 x 2	---

#304 INSERT X MIP ELBOW

- Hydrant elbow

PART #	SIZE	LIST PRICE
973980SS	3/4 x 3/4	---
973982SS	1 x 1	---

LEAD FREE BRONZE INSERT FITTINGS

- NSF Approved
- ANSI 61-8

INSERT X INSERT

PART #	SIZE	LIST PRICE
973961LF	3/4	---
973962LF	1	---
973963LF	1-1/4	---

- NSF Approved
- ANSI 61-8

INSERT TEE

PART #	SIZE	LIST PRICE
973965LF	3/4	---
973966LF	1	---

- NSF Approved
- ANSI 61-8

INSERT X MALE BRANCH TEE

PART #	SIZE	LIST PRICE
973970LF	1 x 3/4	---
973971LF	1	---

- NSF Approved
- ANSI 61-8

INSERT X INSERT ELBOW

PART #	SIZE	LIST PRICE
973975LF	3/4	---
973976LF	1	---

WELL COUPLINGS

304 SS DROP WELL COUPLINGS STANDARD

PART #	SIZE	LIST PRICE
62416DC	1-1/4	---

SEE KNOWLEDGE BANK FOR DIMENSIONS

WARNING: This product can expose you to chemicals, including lead, which are known to the State of California to cause cancer and birth defects or other reproductive harm. For more information, visit www.P65Warnings.ca.gov

PVC VALVES

PLUMBING ACCESSORIES

WHITE PVC BALL VALVES

•Quarter turn
•Solvent ends comply with ASTM D2466
•Designed for use in residential, commercial & industrial system as well as waste water, chemical, agricultural applications, marine, food processing, swimming pools.
•Corrosion resistant
•EPDM seal • FULL PORT •EPDM O-ring
•Fits both Sch. 40 & 80 pipe
•Rated for 150 PSI at 73°F • Threaded ends comply with ANSI B1.20.1

MOLDED IN PLACE - WHITE PIPE THREADS

PART#	SIZE	CASE	LIST PRICE
940284	1/2"	100	---
940285	3/4"	100	---
940286	1"	100	---
940287	1-1/4"	100	---
940288	1-1/2"	48	---
940289	2"	24	---
940291	3"	12	---
940292	4"	6	---

WHITE SOCKET - SLIP X SLIP

PART #	SIZE	CASE	LIST PRICE
940294	1/2"	100	---
940295	3/4"	100	---
940296	1"	100	---
940297	1-1/4"	100	---
940298	1-1/2"	48	---
940299	2"	24	---
940300	2-1/2"	12	---
940301	3"	12	---
940302	4"	6	---

GREY PVC BALL VALVES

FEATURES

- Sizes range from 1/2" to 4"
- Excellent flow characteristics
- Leak-tight shut-off
- EPPM O-Ring
- SCH 80
- Test pressure: 225 psi @ 73°F
- Working Pressure:150 psi @ 73°F

FIP X FIP THREADED BALL VALVE

PART #	SIZE	CASE	LIST PRICE
899000	1/2"	100	---
899001	3/4"	100	---
899002	1"	100	---
899003	1-1/4"	100	---
899004	1-1/2"	48	---
899005	2"	24	---
899006	2-1/2"		---
899007	3"		---
899008	4"		---

SLIP X SLIP BALL VALVE

PART #	SIZE	CASE	LIST PRICE
899050	1/2"	100	---
899051	3/4"	100	---
899052	1"	100	---
899053	1-1/4"	100	---
899054	1-1/2"	48	---
899055	2"	24	---

CPVC SLIP X SLIP BALL VALVE

PART #	SIZE	LIST PRICE
940281	1/2"	---
940282	3/4"	---

WARNING: This product can expose you to chemicals, including lead, which are known to the State of California to cause cancer and birth defects or other reproductive harm. For more information, visit www.P65Warnings.ca.gov

INLINE PLASTIC SPRING CHECK VALVE

Socket x Socket

• 200 PSI working pressure @ 77°F .5 PSI to open.

PART#	SIZE	LIST PRICE
940325	1/2"	---
940326	3/4"	---
940327	1"	---
940328	1-1/4"	---
940329	1-1/2"	---
940330	2"	---

INLINE PLASTIC SPRING CHECK VALVE FEMALE THREADED ENDS

• 200 PSI working pressure @ 77°F .5 PSI to open.

PART#	SIZE	LIST PRICE
940331	1/2"	---
940332	3/4"	---
940333	1"	---
940334	1-1/4"	---
940335	1-1/2"	---
940336	2"	---

PLASTIC DRUM FAUCETS

• Pipe threads to ANSI B1.20.1 • Hose threads to ANSI B 1.20.7

The FLO-RITE faucet has been engineered to meet the demand for greater chemical resistance, using linear polyethylene for the stem.

"FLO-RITE" DRUM FAUCET

PART #	SIZE	LIST PRICE
46277	3/4"	---

DRUM & BARREL FAUCET VALVE

• Die cast body w/ nylon seat and steel spring.
• For use with all petroleum products except trichlorethylene.

G261N

Not suitable for potable water

SELF-CLOSING DRUM & BARREL FAUCET

PART #	SIZE	LIST PRICE
46270	3/4"	---

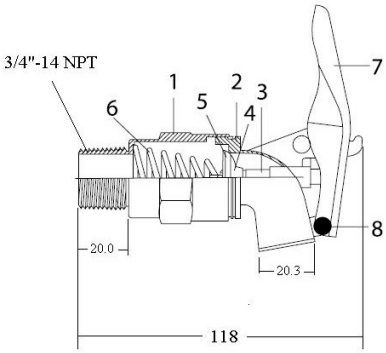

PART #	PART NAME	MATERIAL
1	Body	Zinc
2	Bonnet	Zinc
3	Stem	Steel
4	Disc	Plastic
5	Seal	Rubber
6	Spring	Zinc plated steel
7	Handle	Aluminum
8	Rivet	Aluminum

WARNING: This product can expose you to chemicals, including lead, which are known to the State of California to cause cancer and birth defects or other reproductive harm. For more information, visit www.P65Warnings.ca.gov

VALVES

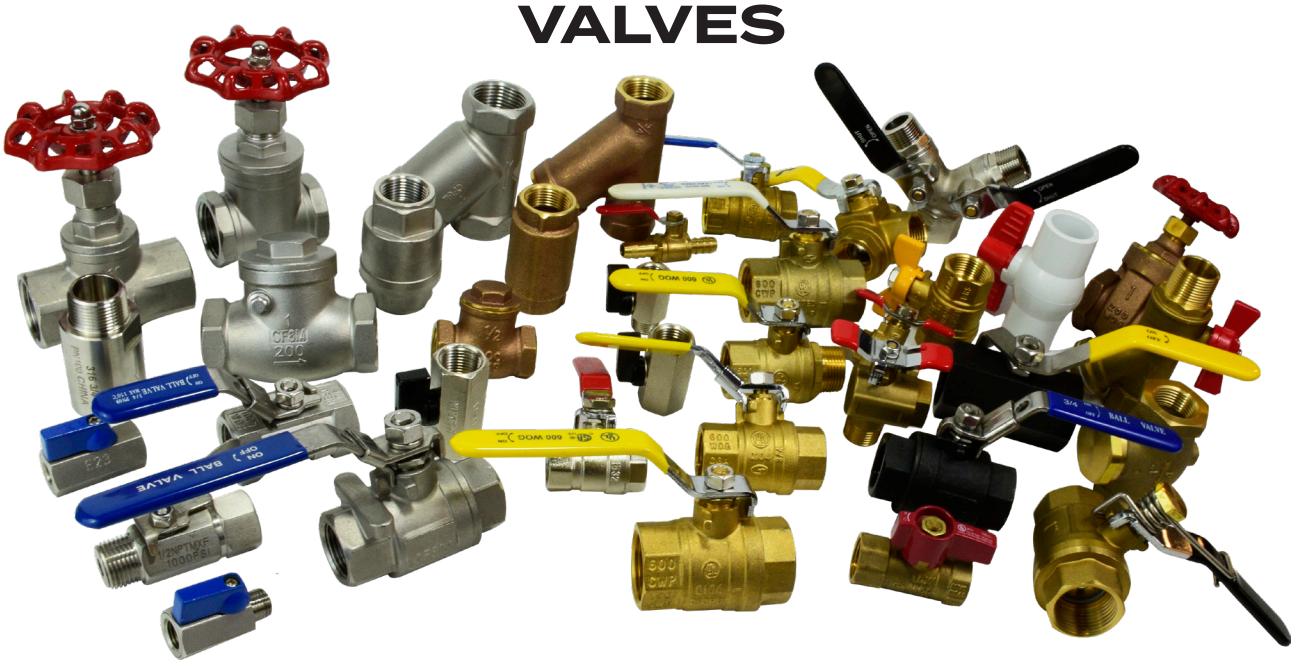

VALVES

Forged Brass
Full Port Ball
Locking Handle
Butterfly Handle
N/P Ball Valve
Italian Ball Valve
M X F Ball Valve
Spring Handle Ball Valve
Right Angle Ball valve
Wye, 3-Way Ball Valve
Safety Exhaust Ball Valve
Gas Valves
Mini Ball Valves
3-Way Valves
MISC
Gate Valves
Y Strainer
Check Valves

Stainless Steel Valves

Ball Valves
SS Mini Ball Valve
Check Valves
Y-strainer, Globe,Gate

Carbon Steel Valves
Ball Valves
Check Valves

Ductile Iron

Butterfly
Check
Gate
Ductile Iron Valves
Vertical Post Indicator

BALL VALVE PRIVATE LABEL PROGRAM

Midland will put your company name and logo on our ball valve handle for FREE. Simply place a minimum blanket order of 10 cases per size and Midland will stock them under a special part # for your access only. Please allow 90-120 days for delivery on the first shipment only: Then have them delivered as you need them!

WARNING: This product can expose you to chemicals, including lead, which are known to the State of California to cause cancer and birth defects or other reproductive harm. For more information, visit www.P65Warnings.ca.gov

LOCKING HANDLE BALL VALVE

• BRASS • 600WOG • FULL PORT

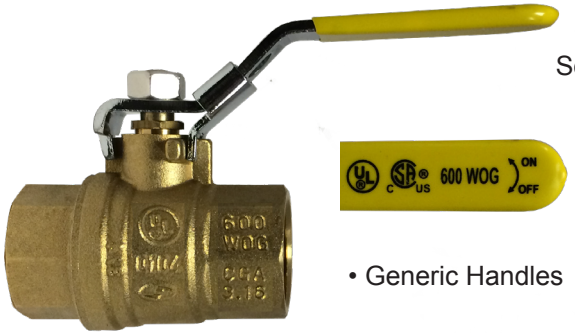

See specs on previous page

• Generic Handles

PART#	SIZE	DIMENSION INCHES						WEIGHT	BOX/CASE	LIST PRICE
	NPT	DN	A	B	C	E	CH			
940171L	1/4"	0.31	1.73	1.84	3.15	0.49	0.71	0.39	70/140	---
940172L	3/8"	0.39	1.81	1.88	3.86	0.49	0.79	0.35	70/140	---
940173L	1/2"	0.58	2.23	2.09	3.43	0.61	0.98	0.49	50/100	---
940174L	3/4"	0.75	2.48	2.24	3.62	0.62	1.20	0.78	30/60	---
940175L	1"	0.94	2.95	2.67	4.42	0.73	1.50	1.18	20/40	---
940176L	1-1/4"	1.26	3.42	3.05	4.73	0.77	1.81	1.76	12/24	---
940177L	1-1/2"	1.57	3.78	3.51	5.18	0.78	2.09	2.53	9/18	---
940178L	2"	1.97	4.18	3.84	5.24	0.75	2.60	3.53	6/12	---

BUTTERFLY HANDLE BALL VALVE

• BRASS • 600WOG • FULL PORT

See specs on previous page

PART#	SIZE						WEIGHT	BOX/CASE	LIST PRICE
	NPT	A	B	C	D	E			
940171T	1/4"	1.75	1.488	1.831	0.315	0.457	0.342	70/140	---
940172T	3/8"	1.756	1.488	1.831	0.394	0.457	0.31	70/140	---
940173T	1/2"	2.047	1.756	2.394	0.583	0.520	0.44	50/100	---
940174T	3/4"	2.362	1.921	2.394	0.748	0.563	0.68	30/60	---

• Not Lead Free AB1953 Compliant

WARNING: This product can expose you to chemicals, including lead, which are known to the State of California to cause cancer and birth defects or other reproductive harm. For more information, visit www.P65Warnings.ca.gov

ITALIAN BALL VALVE

• BRASS • 600WOG • FULL PORT

5 PSIG C US

UL842, UL258, UL125,FM

ISO 9002 Manufacturer

FEATURES

CSA AGA 3.88 5 PSIG IAMPO IGC 157 - 2004b

- **SOLID CHROME PLATED BRASS BALL**
- Suitable for full range of liquids and gases
- Minimal pressure drop due to large full size ports
- Bottom loaded, pressure retaining stem
- Pressure rated at 600psi (42 bars) WOG (non-shock) and 150 WSP (10.34 bars) saturated steam. Virgin TFE stem packing seal, thrust washer and seats.
- Yellow vinyl insulator on heavy duty plated carbon steel handles.
- Fast 1/4 turn open or close operation
- Low operating torque
- Flow can go both directions
- Generic Handles
- **Adjustable stem packing gland**
- Maximum operating temerature: 248°F (120° C) at 600 PSI
- Minimum operating temperature: -20°F (-40°C)
- Each valve individually tested
- Forged Brass - for more strength
- Threaded ends to ANSI B1.20.1
- Hard chromium plated solid ball
- Bottom entry, blow-out proof stem
- Deeper threads - for better connections

MADE IN ITALY

• REVERSIBLE HANDLES

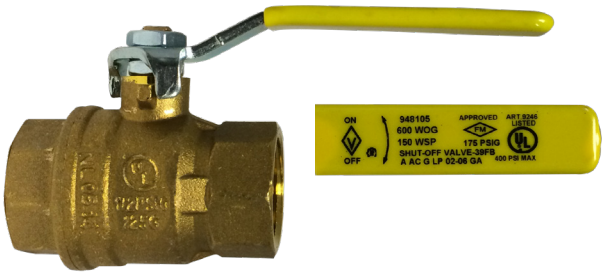

Female x Female

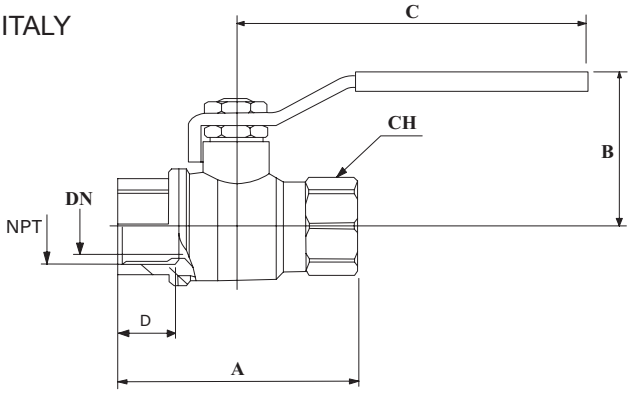

PART#	SIZE	DIMENSION INCHES						WEIGHT	BOX/CASE	LIST PRICE
	NPT	DN	A	B	C	D	CH			
943200	1/4"	.39	1.96	1.53	3.31	.43	.75	0.36	24/96	---
943201	3/8"	.39	1.96	1.53	3.31	.43	.86	0.40	24/96	---
943202	1/2"	.57	2.09	1.57	3.25	.46	.98	0.44	20/80	---
943203	3/4"	.75	2.28	1.77	3.80	.49	1.22	0.57	14/56	---
943204	1"	.94	2.80	2.03	3.80	.59	1.50	0.89	6/24	---
943205	1-1/4"	1.24	3.50	2.32	4.72	0.72	1.85	1.64	4/16	---
943206	1-1/2"	1.49	3.90	3.02	6.38	0.85	2.13	2.78	2/8	---
943207	2"	1.96	4.07	3.27	6.38	.65	2.64	3.21	2/8	---
942208	2-1/2"	2.48	5.80	4.98	7.54	1.06	3.31	6.97	5	---
942209	3"	2.99	6.85	5.63	8.86	1.14	3.89	10.34	3	---
942210	4"	3.54	7.67	6.04	8.86	1.22	4.80	18.77	1	---

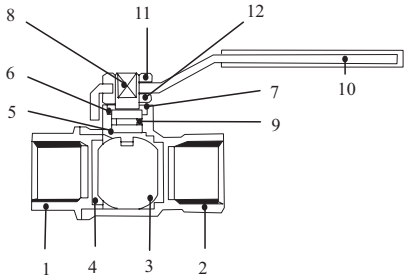

POS	COMPONENTS	MATERIALS	N
1	Body	Forged Brass	1
2	End Connection	Forged Brass	1
3	Ball	CP Brass	1
4	Ball Stems	P.T.F.E.	2
5	Stem Antif. Seat	P.T.F.E.	1
6	Stem Seat	P.T.F.E.	1
7	Brass Ring	Brass	1
8	Stem	Brass	1
9	O-Ring	NBR 80	1
10	Handle	Steel	1
11	Nut	Steel	1
12	Nut	Brass	1

WARNING: This product can expose you to chemicals, including lead, which are known to the State of California to cause cancer and birth defects or other reproductive harm. For more information, visit www.P65Warnings.ca.gov

MALE X FEMALE BRASS BALL VALVE

• 600WOG • FULL PORT

UL842, UL258

- Solid chrome plated brass ball
- Suitable for full range of liquids and gases.
- Minimal pressure drop due to large full size ports.
- Bottom loaded, pressure retaining stem.
- Pressure rated at 600psi (42 bars) WOG (non-shock)
  and 150psi (10.34 bars) saturated steam. Virgin TFE
  stem packing seal, thrust washer and seats.
- Yellow vinyl insulator on heavy duty plated carbon steel handles.
- Fast 1/4 turn open or close operation.
- Flow both directions.
- Low operating torque.
- Adjustable stem packing gland.
- Generic Handles
- Maximum operating temperature: 248^{0}F (120^{0}C)
- Minimum operating temperature: -20^{0}F (-40^{0}C)
- Each valve individually tested.
- Forged Brass - for more strength.
- Threaded ends to ANSI B1.20.1
- Hard chromium plated solid ball
- Bottom entry, blow-out proof stem.
- Made in China

- Not Lead Free

PART#	SIZE	NPT	A	B	C	D	E	WEIGHT	BOX/CASE	LIST PRICE
948170	1/4"	1/4 - 18	2.016	1.689	2.756	0.315	0.457	0.29	70/140	---
948171	3/8"	3/8 - 18	2.094	1.89	3.543	0.394	0.457	0.33	70/140	---
948172	1/2"	1/2 - 14	2.343	2.05	3.543	0.583	0.520	0.47	50/100	---
948173	3/4"	3/4 - 14	2.618	2.20	3.780	0.748	0.563	0.68	30/60	---
948174	1"	1 - 11.5	3.000	2.579	4.528	0.945	0.630	1.11	20/40	---
948175	1-1/4"	1-1/4 - 11.5	3.563	2.953	4.528	1.260	0.709	1.70	12/24	---
948176	1-1/2"	1-1/2 - 11.5	3.965	3.346	5.512	1.575	0.717	2.50	9/18	---
948177	2"	2 - 11.5	4.496	3.681	5.512	1.969	0.748	3.57	6/12	---

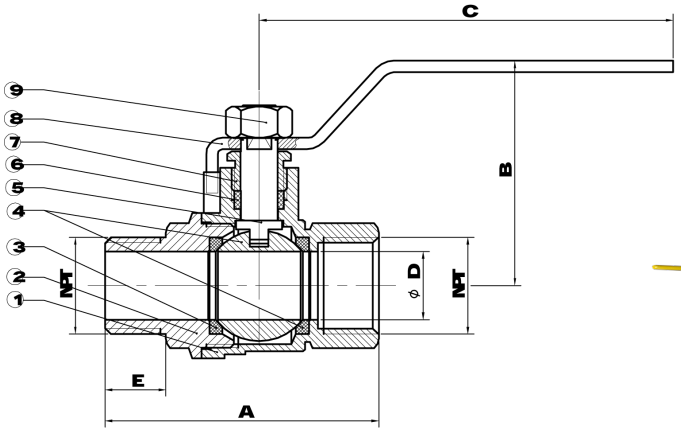

POS	COMPONENTS	MATERIALS
1	Body	C37700
2	End Cap	CS7700
3	Ball Seat	PTFE
4	Ball	CS7700
5	Stem	CS7700
6	Stem Reducing	PTFE
7	Reducing Nut	CS7700
8	Lever Handle	1008
9	Stem Nut	A570 Gr.A

Locking Handle option

Tee handle option

WARNING: This product can expose you to chemicals, including lead, which are known to the State of California to cause cancer and birth defects or other reproductive harm. For more information, visit www.P65Warnings.ca.gov

ITALIAN MALE X FEMALE BALL VALVE

• BRASS • 600WOG • FULL PORT

Gas Approved

5 PSIG C US

UL842, UL258, UL125,FM

CSA AGA 3.88 5 PSIG Made in Italy

ISO 9002 Manufacturer

FEATURES

- Solid chrome plated brass ball
- Suitable for full range of liquids and gases.
- Minimal pressure drop due to large full size ports.
- Bottom loaded, pressure retaining stem.
- Pressure rated at 600psi (42 bars) WOG (non-shock) and 150psi (10.34 bars) saturated steam. Virgin TFE stem packing seal, thrust washer and seats.
- Yellow vinyl insulator on heavy duty plated carbon steel handles.
- Fast 1/4 turn open or close operation.
- Generic Handles
- Flow both directions.

- Low operating torque.
- Adjustable stem packing gland.
- Maximum operating temperature: 248^{0}F (120^{0}C) at 600 p.s.i
- Minimum operating temperature: -20^{0}F (-40^{0}C)
- KV: Pressure drop m^3/h.
- Each valve individually tested.
- Forged Brass - for more strength.
- Threaded ends to ANSI B1.20.1
- Hard chromium plated solid ball
- Bottom entry, blow-out proof stem.
- Deeper threads - for better connections.

MIP x FIP

MADE IN ITALY

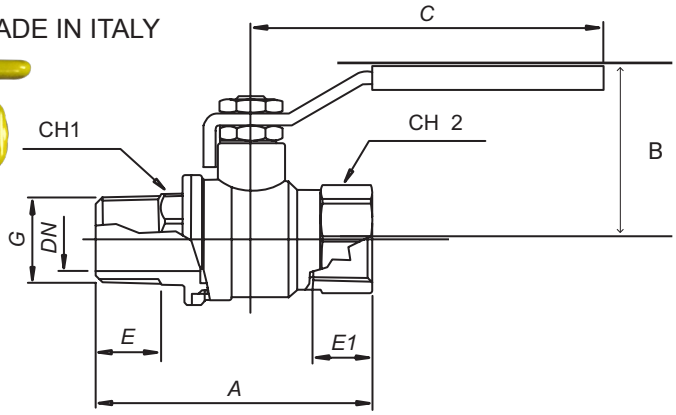

PART#	SIZE	DN	A	B	C	E	E1	CH1	CH2	WEIGHT	BOX/CASE	LIST PRICE
948101	1/4"	.39	2.18	1.53	3.28	.39	.43	.55	.75	0.35	24/96	---
948102	3/8"	.39	2.20	1.53	3.28	.43	.43	.71	.86	0.35	24/96	---
948103	1/2"	.57	2.54	1.57	3.28	.62	.46	.87	.98	0.42	14/56	---
948104	3/4"	.75	2.75	1.77	3.80	.55	.49	1.12	1.22	0.68	12/48	---
948105	1"	.94	3.23	2.03	3.80	.69	.59	1.34	1.50	0.95	6 /24	---
948106	1-1/4"	1.24	3.86	2.32	4.63	.81	.79	1.69	1.90	1.66	4/16	---
948107	1-1/2"	1.49	4.20	2.98	6.28	.85	.64	2.15	2.13	2.83	2/8	---
948108	2"	1.96	4.90	3.27	6.38	.90	.75	2.40	2.64	4.22	1/4	---

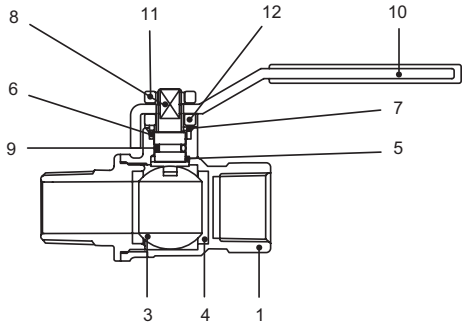

POS	COMPONENTS	MATERIALS	N
1	Body	CW617N Forged Brass	1
2	End Connection	CW617N Forged Brass	1
3	Ball	CW617N CP Brass	1
4	Ball Stems	P.T.F.E.	2
5	Stem Antif. Seat	P.T.F.E.	1
6	Stem Seat	P.T.F.E.	1
7	Brass Ring	CW617N Brass	1
8	Stem	CW617N Brass	1
9	O-Ring	NBR 80	1
10	Handle	UNI EN 10025 Steel	1
11	Nut	UN 5771 Steel	1
12	Nut	CW617N Brass	1

• Not Lead Free

WARNING: This product can expose you to chemicals, including lead, which are known to the State of California to cause cancer and birth defects or other reproductive harm. For more information, visit www.P65Warnings.ca.gov

TEE HANDLE BALL VALVE MALE X FEMALE

UL842, UL258

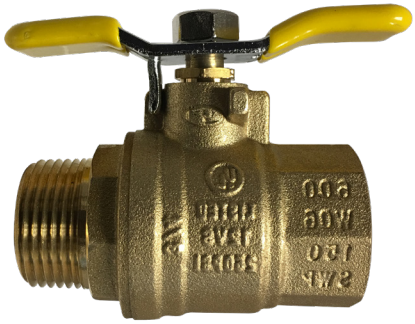

Features
- Thread conform ANSI B1.20.1
- Forged brass body
- Blow out proof stem design
- Packing nut, O-Ring and packing on the stem seal
- Chrome Plated Brass Ball
- Handle with vinyl grip

Performance rating
- 600 PSI (WOG) 150 PSI (WSP) Service
- Temperature range: -20° F to 300° F
- Made in China
- Not lead free

PART#	SIZE	DIMENSION INCHES							
	NPT	A	B	C	D	E	WEIGHT	BOX/CASE	LIST PRICE
948171T	3/8"	2.094	1.213	2.67	0.394	0.457	0.33	70/140	---
948172T	1/2"	2.343	1.61	3.12	0.583	0.520	0.49	50/100	---
948173T	3/4"	2.618	1.26	3.12	0.748	0.563	0.66	30/60	---
948174T	1"	3.000	1.921	3.701	0.945	0.630	1.06	20/40	---

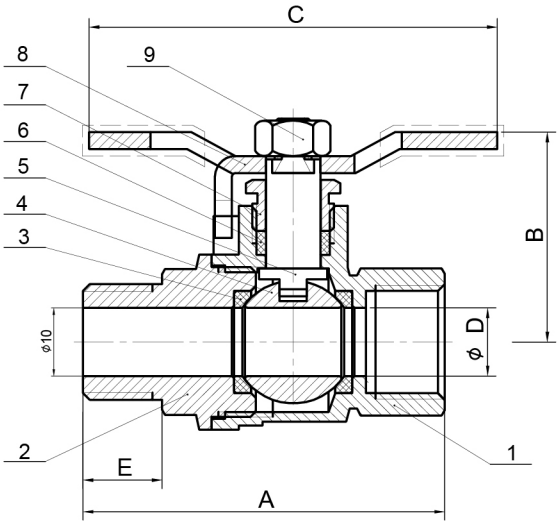

ITEM	PART	MATERIALS
1	Body	Brass
2	End Cap	Brass
3	Ball Seat	PTFE
4	Ball	C/P Brass
5	Stem	Brass
6	Stem Packing	PTFE
7	Packing Nut	Brass
8	T-Handle	Nickel plating steel
9	Stem Nut	Brass plating steel

WARNING: This product can expose you to chemicals, including lead, which are known to the State of California to cause cancer and birth defects or other reproductive harm. For more information, visit www.P65Warnings.ca.gov

LOCKING HANDLE BALL VALVES - FEMALE X MALE

PLUMBING

UL842, UL258

Features

- Thread conform ANSI B1.20.1
- Forged brass body
- Blow out proof stem design
- Packing nut, O-Ring and packing on the stem seal
- Chrome Plated Brass ball
- Handle with vinyl grip

Performance rating

- 600 PSI (WOG) 150 PSI (WSP) Service
- Temperature range: -20° F to 300° F
- Made in China
- Not lead free

PART#	SIZE	DIMENSION INCHES							
	NPT	A	B	C	D	E	WEIGHT	BOX/CASE	LIST PRICE
948170L	1/4"	2.016	1.732	3.543	0.315	0.457	0.32	70/140	---
948171L	3/8"	2.094	1.732	3.543	0.394	0.457	0.37	70/140	---
948172L	1/2"	2.343	1.941	3.543	0.583	0.520	0.50	50/100	---
948173L	3/4"	2.618	2.106	3.78	0.748	0.563	0.77	30/60	---
948174L	1"	3.000	2.579	4.528	0.945	0.630	1.21	20/40	---
948175L	1-1/4"	3.563	2.961	4.528	1.260	0.709	1.74	12/24	---
948176L	1-1/2"	3.965	3.366	5.36	1.575	0.717	2.58	9/18	---
948177L	2"	4.496	3.701	5.36	1.969	0.748	3.73	6/12	---

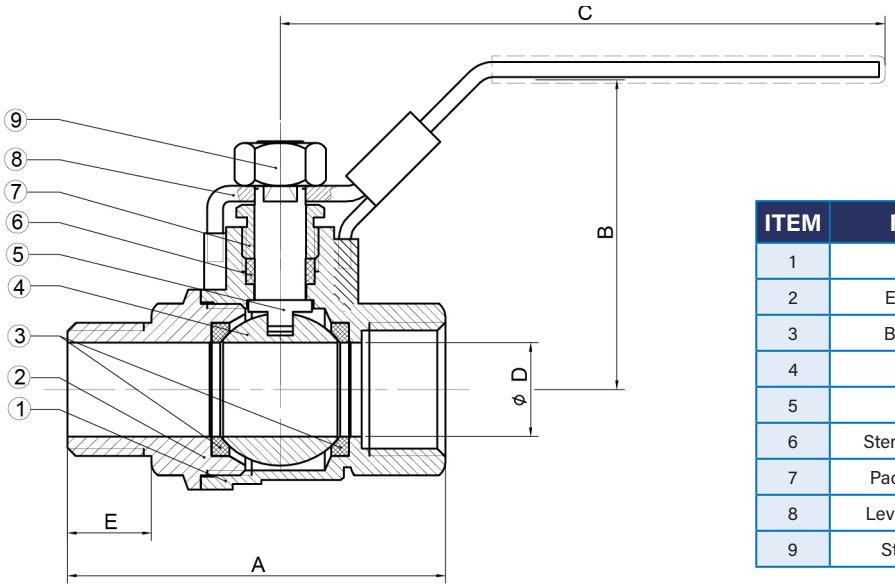

ITEM	PART	MATERIALS
1	Body	Brass
2	End Cap	Brass
3	Ball Seat	PTFE
4	Ball	C/P Brass
5	Stem	Brass
6	Stem Packing	PTFE
7	Packing Nut	Brass
8	Lever Handle	Nickel plating steel
9	Stem Nut	Brass plating steel

WARNING: This product can expose you to chemicals, including lead, which are known to the State of California to cause cancer and birth defects or other reproductive harm. For more information, visit www.P65Warnings.ca.gov

SPRING HANDLE/ RIGHT ANGLE

PLUMBING

BRASS SPRING HANDLE BALL VALVE

Working pressure:600 PSI for brass
Temperature Range:-40°F to 365°F(-40°C to +185°C)
Material:Brass
Spring Lever Handle w/Vinyl Grip
Made in China
Not lead free

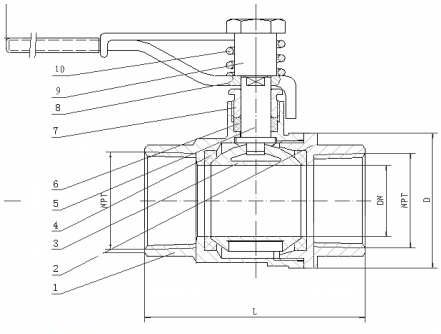

PART #	PART NAME	MATERIAL
1	Body	Brass
2	Bonnet	Brass
3	Ball	Brass
4	Sealing Seat	PTFE
5	Stem	Stainless Steel
6	Packing Ring	PTFE
7	Gland	Brass
8	Handle	Stainless Steel
9	Bolt	Brass
10	Spring	Stainless Steel

PART#	SIZE	L	D	DN	H	L3	WTG	BOX/CASE	LIST PRICE
947103	1/2"	2.19	1.24	0.59	1.83	4.24	0.54	10/80	---
947104	3/4"	2.38	1.5	0.75	2.19	4.24	0.72	5/40	---
947105	1"	3.23	1.91	0.98	2.49	4.71	1.32	5/30	---

RIGHT ANGLE BRASS BALL VALVE

Working pressure: 250PSI
Temperature Range -40° to 400°F(-40 °C to +205 °C)
With lever Handle Polytetrafluoroethylene seats 2-pc,full port Heavy Duty forged Body Steel Handle w/Vinyl GripMade in China
Not lead free

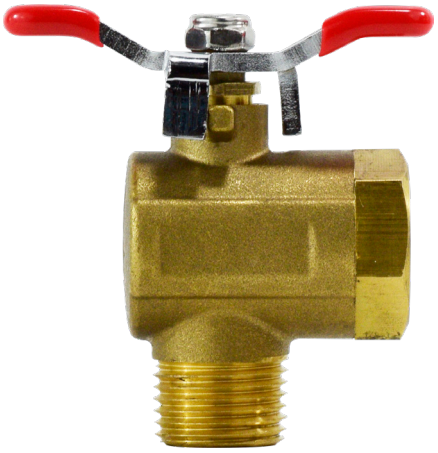

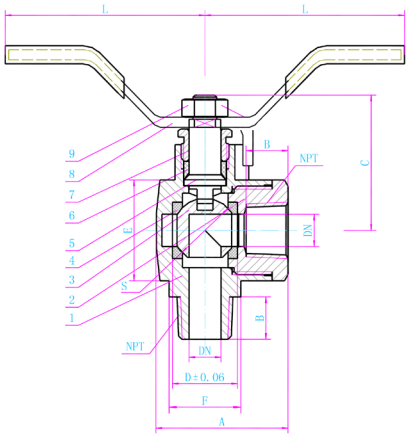

PART #	PART NAME	MATERI-AL
1	Body	Brass
2	Cap	Brass
3	Ball	Brass
4	Seat	PTFE
5	Stem	Brass
6	Stuffing	PTFE
7	Packing Nut	Brass
8	Handle	Steel
9	Nut	Brass

PART #	SIZE	A	B	C	D	S	DN	L	E	F	WTG	BOX/CASE	LIST PRICE
947111	1/4	1.59	0.41	1.40	0.64	0.63	0.32	2.60	0.98	0.65	0.34	12/120	---
947112	3/8	1.59	0.41	1.40	0.73	0.71	0.39	2.60	0.98	0.65	0.36	12/120	---
947113	1/2	1.73	0.55	1.40	0.79	0.87	0.55	2.60	1.08	0.83	0.47	10/80	---

WARNING: This product can expose you to chemicals, including lead, which are known to the State of California to cause cancer and birth defects or other reproductive harm. For more information, visit www.P65Warnings.ca.gov

3 WAY AND SAFETY EXHAUST BALL VALVES

PLUMBING

3-WAY WYE BRASS BALL VALVE,VENTED AND UNVENTED

- Max.pressure:W.O.G.(water,oil,inert gas)
  Unvented Valve:600psi@70ºF
  Vented Valve:250psi@70ºF
  W.S.P.(working steam pressure)
  Unvented Valve:150psi@365ºF
  Vented Valve:Not related
- Vacuum Rating:29"Hg
- Temperature Range:-40º to 365ºF
- Ports:Full

PART#	PART NAME	MATERIAL
1	Body	Brass Nickel Plated
2	Seat	PTFE
3	Ball	Brass,Cr.Plated
4	Cap	Brass Nickel Plated
5	Stem	Brass
6	O-Ring	Fluoroelastomer
7	Handle	Stainless Steel
8	Nut	Steel

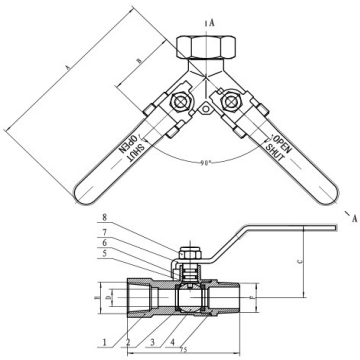

Designed for the portable air compressor industry,these valves control the flow of water, oil, and inert gases in two direction and are great for mixing and diverting. They have a single female inlet and two male outlets with two ball valves.Valves are Brass Nickel Plated and have chrome-plated brass balls,brass blow-out proof stems ,PTFE seats and seals,and steel lever handles with vinyl grips.Vented valves has a drilled hole on the two valve balls and body that vents compressed air in the line when valve is closed. Connections:1"NPT female inlet and 3/4"NPT male outlet. • Made in China • Not lead free

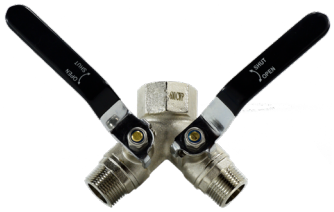

NON-VENTED

NOW WITH STAINLESS STEEL HANDLES

VENTED

PART #	BALL	E	F	A	B	C	D	G	WTG	BOX/CASE	LIST PRICE
947125	Non-vented	1" Female	3/4" Male	5.18"	2.5"	2.05"	0.59"	90°	1.43	2/24	---
947126	Vented								1.48	2/24	---

EXHAUST VALVES

AUTOMATIC DRAIN & LATCH LOCK HANDLE

Full port hot forged brass ball valve, blow-out proof stem, downstream automatic vent with lockable handle in compliance with OSHA requirements.

- Maximum working pressure: 200 PSI (CWP).
- Temperature rating: +15°F through +210°F.
- Made in Italy
- Not lead free

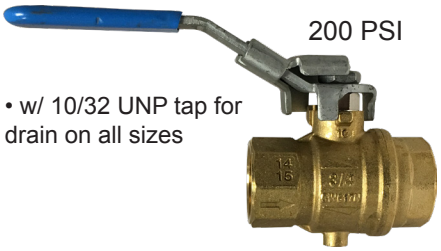

200 PSI

- w/ 10/32 UNP tap for drain on all sizes

OPEN

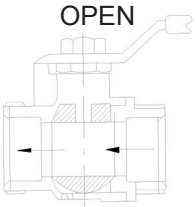

Valve - open position. Drain vent shut off.

CLOSED

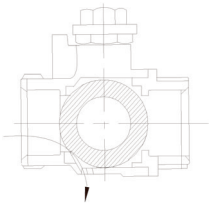

PART#	SIZE	LIST PRICE
948131	1/4"	---
948132	3/8"	---
948133	1/2"	---
948134	3/4"	---
948135	1"	---

Valve - closed and draining occurs. Upstream seat prevents air flow. Downstream system is vented to atmosphere.

SAFETY EXHAUST BALL VALVE

- Threaded - Two Piece Body - Full Port • Vented
- Blow-out Proof Stem - PTFE Seats • 400 PSI WOG
- To Exhaust and Downstream Air in the Closed Position w/ locking lever handle.
- Made in China • Not lead free
- 150 SWP

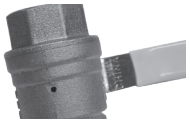

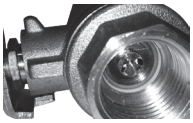

PART #	SIZE	A	B	D	E	LIST PRICE
948141	1/4"	1.756	1.88	0.394	0.457	---
948142	3/8"	1.756	1.88	0.394	0.457	---
948143	1/2"	2.047	2.13	0.583	0.520	---
948144	3/4"	2.362	2.28	0.748	0.563	---

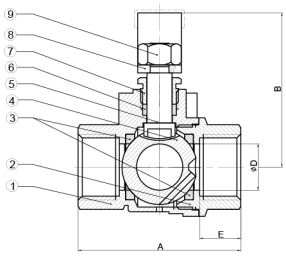

ITEM	PART	MATERIAL
1	Body	Brass
2	End Cap	Brass
3	Ball Seat	PTFE
4	Ball	Brass
5	Stem	Brass
6	Stem Packing	PTFE
7	Packing Nut	Brass
8	Lever Handle	Nickel Plating Steel
9	Stem Nut	Nickel Plating Steel

WARNING: This product can expose you to chemicals, including lead, which are known to the State of California to cause cancer and birth defects or other reproductive harm. For more information, visit www.P65Warnings.ca.gov

GAS BALL VALVES

5 PSIG
C US

MANUAL VALVE
LISTED
THREADED NPT
UL 842, UL 258, UL 125

CSA AGA 3.88 5 PSIG

ISO 9002 MANUFACTURER

- Material: C37700
- Forged brass,Regular port,Thread*Flare Thread
- Thread ends in ANSI B1.20.1
- Working temperature:0-65°(32-149°)
- Pressure :1/2PSI;5PSI;

FEATURES

- ASME B16.44/CR91; ANSI Z21.15/CSA9.1
- UL 125 For LP-Gas 125psig
- Made in China

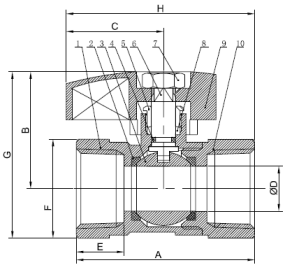

NO.	ITEM	TOTAL	MATERIAL
10	BALL VALVE CAP	1	BRASS
9	HANDLE	1	AL-alloy
8	PACKING	1	PTFE
7	HANDLE NUT	1	PLATED STEEL
6	STEM	1	BRASS
5	PACKING NUT	1	BRASS
4	O-RING	1	NBR
3	BALL	1	BRASS
2	SEALING WASHER	2	PTFE
1	BALL VALVE BODY	1	BRASS

GAS BALL VALVE (2-PIECE)

FEMALE X FEMALE

PART#	SIZE	WTG	BOX/CASE	LIST PRICE
943311	3/8"	0.35	10/100	---
943312	1/2"	0.44	10/100	---
943313	3/4"	0.62	10/100	---
943314	1"			

SIZE	ØD	A	B	C	E	F	G	H
3/8″	0.394	1.752	1.437	1.28	0.472	0.945	1.909	2.146
1/2″	0.394	2.204	1.437	1.28	0.606	1.043	1.961	2.461
3/4″	0.591	2.362	1.535	1.28	0.626	1.299	2.815	2.476

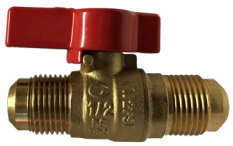

FLARE X FLARE

PART#	SIZE	LIST PRICE
943342	3/8	---
943343	1/2	---
943345	5/8	---

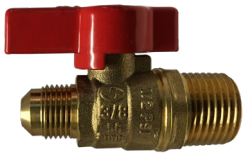

FLARE X MIP

PART#	SIZE	LIST PRICE
943347	3/8 x 1/2	---
943348	1/2 x 1/2	---

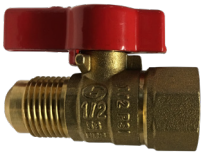

FLARE X FIP

PART#	SIZE	LIST PRICE
943331	3/8 x 1/2	---
943332	1/2 x 1/2	---
943351	5/8 x 3/4	---
943350	15/16 x 3/4	---

MADE IN ITALY

- For use with natural, manufactured, mixed liquified. petroleum and LP gas-air mixtures.
- Deeper thread connections. Smooth quarter-turn.
- Manufactured to ANSI Z21.15, C.G.A. 9.1-M81, 9.2-M88, 1/2 psig. 372 also to A.G.A.3-8, C.G.A. CR91-002, 2 psig.
- Solid chrome plated brass ball
- Bottom entry
- Blow out proof design.
- Double Fluoroelastomer o-rings stem seals
- Polytetrafluoroethylene seats for durability.
- Forged construction for greater strength.
- Larger ports for increased flow capacity.
- Red Reversible handle.
- May be used with water 400 WOG.

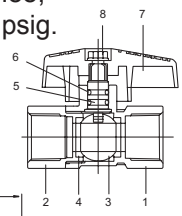

	COMPONENTS	MATERIALS
1	Body	Forged Brass
2	End Connection	Forged Brass
3	Ball	Forged Brass
4	Ball Seats	P.T.F.E.
5	Stem	Brass
6	O-Ring	NBR
7	Butterfly	Steel
8	Screw	UNI 5771 Steel

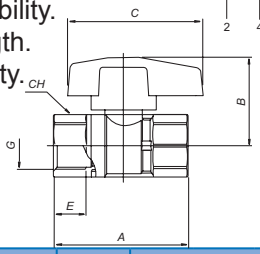

5 PSIG
C US

Manual Valve
LISTED
Threaded NPT
UL 842, UL 258, UL 125

CSA AGA 3.88 5 PSIG

GAS BALL VALVES

FEMALE X FEMALE

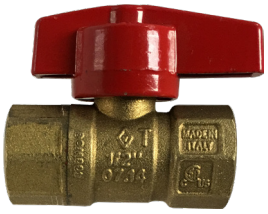

PART#	SIZE	DIMENSION INCHES									LIST PRICE
	G	DN	A	B	C	E	CH	PN IN PSI	WTG	BOX/ CASE	
943212	1/2"	.47	2.26	1.45	2.28	.55	.98	600	0.33	20/80	---
943213	3/4"	.59	2.48	1.57	2.28	.57	1.22	600	0.45	14/56	---

WARNING: This product can expose you to chemicals, including lead, which are known to the State of California to cause cancer and birth defects or other reproductive harm. For more information, visit www.P65Warnings.ca.gov

CHROME PLATED BRASS MINI BALL VALVES

PLUMBING

ITALIAN CHROME PLATED BRASS MINI BALL VALVE

ISO 9002 Manufacturer

FEATURES

- Solid chrome plated brass ball
- Max working pressure 235 psi will handle 300psi@75° F
- Longer body style for longer, deeper thread connections
- One piece drawn sand blasted chrome plated body.
- Each valve is seal tested for maximum safety.
- Double seal system allows valve to be operated in both directions making installation easier.
- Blowout-proof brass stem.
- NPT taper ANSI B1.20.1 threads.
- 32°F to +176°F temperature.
- 1/4 Turn Aluminium handle with mechanical stop.
- NSF Approved valves available upon request!
- Not lead free

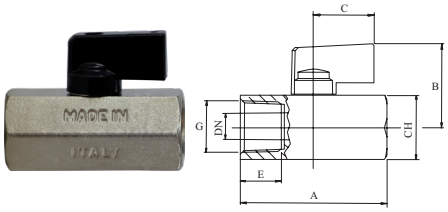

MADE IN ITALY

FEMALE X FEMALE

PART#	SIZE		DIMENSION INCHES							LIST PRICE
	G	DN	A	B	C	E	CH	WTG	BOX/ CASE	
46922I	1/4"	0.31	1.81	1.17	0.9	0.51	0.83	0.24	50/200	---
46923I	3/8"	0.31	1.85	1.17	0.9	0.51	0.83	0.22	50/200	---
46924I	1/2"	0.39	2.18	1.26	0.9	0.61	0.98	0.32	30/120	---

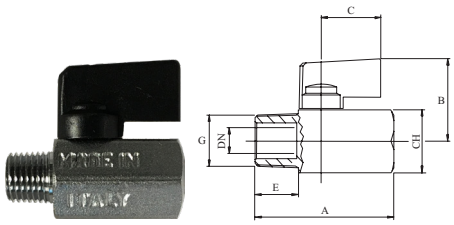

MALE X FEMALE

PART#	SIZE		DIMENSION INCHES							LIST
	G	DN	A	B	C	E	CH	WTG	BOX/ CASE	
46903I	1/4"	0.31	1.75	1.17	0.9	.40	0.83	0.20	50/200	---
46904I	3/8"	0.31	1.81	1.17	0.9	.41	0.83	0.20	50/200	---
46905I	1/2"	0.39	2.14	1.26	0.9	.52	0.98	0.30	40/160	---

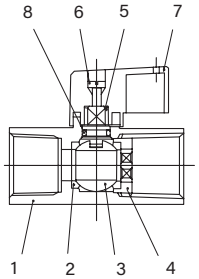

POS	COMPONENTS	MATERIALS	N
1	Body	CW517N Forged Brass	1
2	Ball Seats	P.T.F.E	2
3	Ball	CW517N CP Brass	1
4	Ring Unit	CW614N Brass	1
5	Stem	CW614N Brass	1
6	Screw	UNI 5771 Steel	1
7	Handle	Aluminum	1
8	O-Ring	NBR 80	1

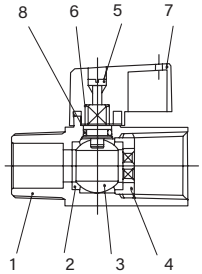

WARNING: This product can expose you to chemicals, including lead, which are known to the State of California to cause cancer and birth defects or other reproductive harm. For more information, visit www.P65Warnings.ca.gov

MINI BALL VALVES
PLUMBING

MINI BALL VALVES

- Chrome plated forged brass body
- Chrome plated brass ball
- NPT taper ANSI B1.20.1 threads*
- 450 PSI working pressure
- At 212°F - 355 PSI
- At 356°F - 142 PSI
- 1/4 Turn Alumzinc handle
- Not lead free
- Made in China

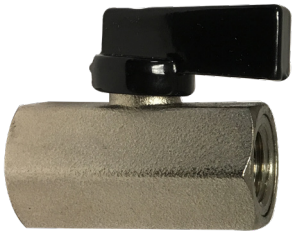

FEMALE X FEMALE - FLAG HANDLE

PART #	SIZE	DIMENSIONS (IN)				WT LBS	BOX/ CASE	
		A	D(FLOW)	F	G			
46934	1/8	1.57	0.24	0.93	1.46	0.21	20/300	---
46935	1/4	1.57	0.31	0.93	1.46	0.20	20/300	---
46936	3/8	1.57	0.28	0.93	1.46	0.22	20/300	---
46937	1/2	1.77	0.35	0.93	1.56	0.24	20/200	---

MINI BALL VALVES W/Fluoroelastomer SEALS

FEMALE X FEMALE - TEE HANDLE

PART #	SIZE	DIMENSIONS (IN)				WT LBS	BOX/ CASE	
		A	D(FLOW)	HANDLE	G			
46934LT	1/8	1.60	0.24	1.34	1.43	0.21	20/300	---
46935LT	1/4	1.57	0.31	1.34	1.43	0.20	20/300	---
46936LT	3/8	1.60	0.28	1.34	1.43	0.22	20/300	---
46937LT	1/2	1.77	0.35	1.34	1.52	0.24	20/200	---

FEMALE X FEMALE - LEVER HANDLE

PART #	SIZE	DIMENSIONS (IN)				WT LBS	BOX/ CASE	
		A	D(FLOW)	F	G			
46934L	1/8	1.57	0.24	1.99	1.50	0.21	20/300	----
46935L	1/4	1.57	0.31	1.99	1.50	0.20	20/300	----
46936L	3/8	1.60	0.28	1.99	1.50	0.22	20/300	----
46937L	1/2	1.77	0.35	1.99	1.59	0.24	20/200	----

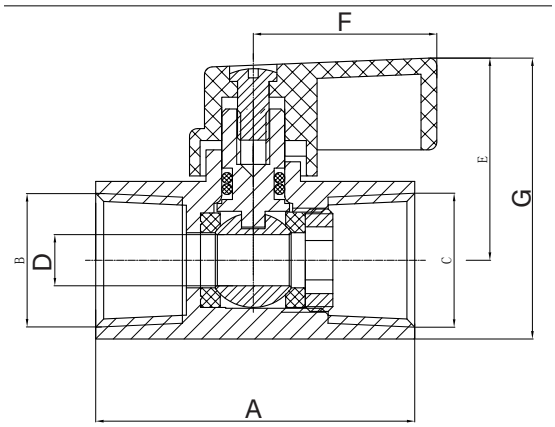

POS	COMPONENTS	MATERIALS	N
1	Body	CP Forged Brass	1
2	Ball Seats	P.T.F.E.	2
3	Ball	CP Brass	1
4	Ring Unit	Brass	1
5	Stern	Brass	1
6	O-Ring - flag handle	NBR 80	1
6	O-Ring - all others	Fluoroelastomer	1
7	Handle	Alumzinc	1
8	Screw	Steel	1

WARNING: This product can expose you to chemicals, including lead, which are known to the State of California to cause cancer and birth defects or other reproductive harm. For more information, visit www.P65Warnings.ca.gov

MINI BALL VALVES
PLUMBING

MINI BALL VALVES

- Chrome plated forged brass body
- Chrome plated brass ball
- NPT taper ANSI B1.20.1 threads*
- 450 PSI working pressure
- At 212°F - 355 PSI
- At 356°F - 142 PSI
- 1/4 Turn Alumzinc handle
- Not lead free
- Made in China

MALE X FEMALE - FLAG HANDLE

PART #	SIZE	DIMENSIONS (IN)				WT LBS	BOX/ CASE	
		A	D(FLOW)	F	G			
46930	1/8	1.57	0.24	0.93	1.46	0.17	20/300	---
46931	1/4	1.57	0.31	0.93	1.46	0.15	20/300	---
46932	3/8	1.57	0.28	0.93	1.46	0.21	20/300	---
46933	1/2	1.77	0.35	0.93	1.56	0.24	20/200	---

MINI BALL VALVES W/Fluoroelastomer SEALS

MALE X FEMALE - TEE HANDLE

PART #	SIZE	DIMENSIONS (IN)				WT LBS	BOX/ CASE	
		A	D(FLOW)	HANDLE	G			
46930T	1/8	1.57	0.24	1.34	1.46	0.17	20/300	---
46931T	1/4	1.57	0.31	1.34	1.46	0.15	20/300	---
46932T	3/8	1.57	0.28	1.34	1.40	0.21	20/300	---
46933T	1/2	1.77	0.35	1.34	1.56	0.24	20/200	---

MALE X FEMALE - LEVER HANDLE

PART #	SIZE	DIMENSIONS (IN)				WT LBS	BOX/ CASE	LIST PRICE
		A	D(FLOW)	F	G			
46930L	1/8	1.57	0.24	1.99	1.50	0.17	20/300	
46931L	1/4	1.57	0.31	1.99	1.50	0.15	20/300	
46932L	3/8	1.57	0.28	1.99	1.50	0.21	20/300	
46933L	1/2	1.77	0.35	1.99	1.59	0.24	20/200	

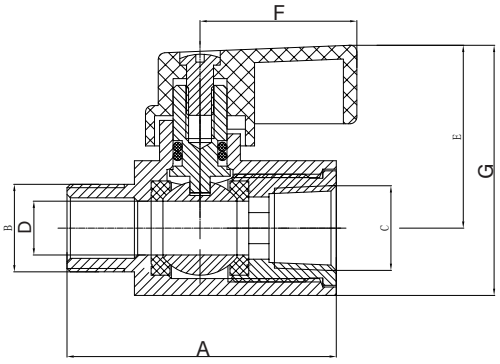

POS	COMPONENTS	MATERIALS	N
1	Body	CP Forged Brass	1
2	Ball Seats	P.T.F.E.	2
3	Ball	CP Brass	1
4	Ring Unit	Brass	1
5	Stern	Brass	1
6	O-Ring - flag handle	NBR 80	1
6	O-Ring - all others	Viton	1
7	Handle	Alumzinc	1
8	Screw	Steel	1

WARNING: This product can expose you to chemicals, including lead, which are known to the State of California to cause cancer and birth defects or other reproductive harm. For more information, visit www.P65Warnings.ca.gov

FORGED BRASS MINI BALL VALVES

PLUMBING

- 180° operational handle, blow out proof stem. Stem with double "O" Rings
- 200 WOG
- Temp rating -20°F - 250°F
- Generic Handles
- Not lead free

NO	PART NAME	MATERIAL	QTY
1	Nut	Steel	1
2	Handle	Steel	1
3	Cover	PVC	1
4	O-Ring	NBR	2
5	Stem	Brass	1
6	Body	Brass	1
7	Seat	Polyte	2
8	Ball Disc	Brass	1
9	End Plug	Brass	1

*Polyte Abbreviation for Polytetrafluoroethylene

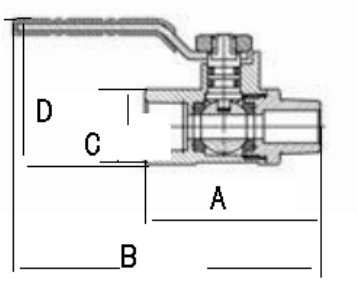

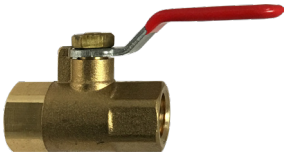

FEMALE X FEMALE

PART #	SIZE	A	B	C	D	LIST PRICE
944113	1/8	1.53	2.80	0.73	1.42	---
944116	1/4	1.53	2.80	0.73	1.42	---
944117	3/8	1.73	2.90	0.87	1.50	---
944140	1/2	2.20	3.08	0.98	1.45	---

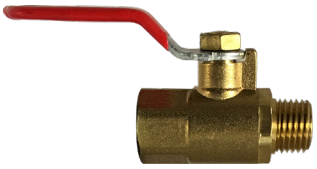

FEMALE X MALE

PART #	SIZE	A	B	C	D	LIST PRICE
944106	1/8	1.69	3.02	0.73	1.46	---
944100	1/4X1/8	1.28	2.90	0.66	1.32	---
944101	1/4	1.70	3.00	0.73	1.46	---
944102	3/8X1/4	1.78	2.50	0.89	1.50	---
944103	3/8X 3/8					

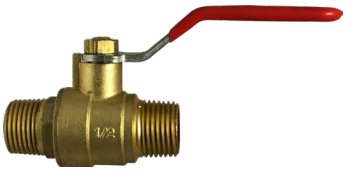

MALE X MALE

PART #	SIZE	A	B	C	D	LIST PRICE
944107	1/8	1.70	2.94	0.65	1.42	---
944109	1/4	1.25	2.66	0.65	1.42	---
944110	3/8	1.90	2.98	0.73	1.42	---

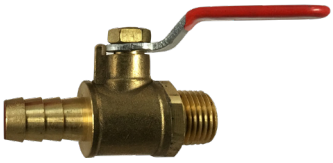

HOSE BARB X MALE

PART #	SIZE	A	B	C	D	LIST PRICE
944132	1/4X1/8	2.05	2.91	0.73	1.51	---
944138	1/4X1/4	2.08	2.98	0.73	1.51	---
944128	3/8X1/4	2.08	3.04	0.73	1.51	---
944130	3/8X3/8	2.12	3.06	0.73	1.51	---
944139	1/2X1/2	2.15	3.19	0.73	1.51	---

HOSE BARB X FEMALE

PART #	SIZE	A	B	C	D	LIST PRICE
944136	1/4X1/4	1.97	2.87	0.73	1.55	---

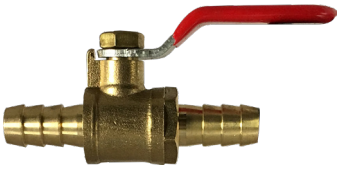

HOSE BARB X HOSE BARB

PART #	SIZE	A	B	C	D	LIST PRICE
944142	1/4X1/4	2.47	3.19	0.73	1.55	---
944134	3/8X3/8	2.47	3.18	0.73	1.55	---

LEAD FREE

PART #	SIZE	A	B	C	D	LIST PRICE
944142LF	1/4	2.49	3.19	0.73	1.55	---

WARNING: This product can expose you to chemicals, including lead, which are known to the State of California to cause cancer and birth defects or other reproductive harm. For more information, visit www.P65Warnings.ca.gov

SIDE OUTLET 3-WAY BALL VALVE

• BRASS • 600WOG • FULL PORT

- Forged Brass
- 600 WOG
- Temp Rating 0-230°F
- 150 SWP

• Side outlet

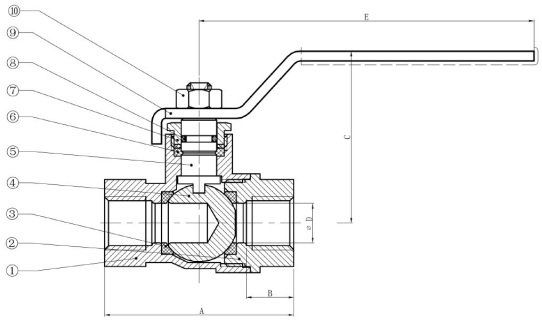

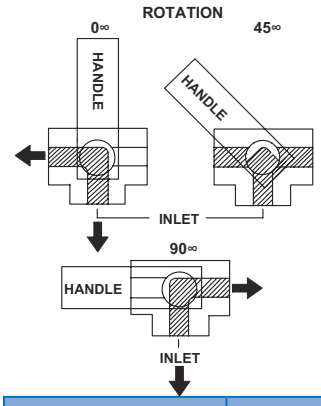

- Full Port
- Blow-out proof stem
- double o-ring stem packing
- PTFE Seal
- Made in China
- Not lead free

Nomenclature & Materials

NO	PART NAME	MATERIAL	QTY
1	Body	Brass	1
2	End Cap	Brass	1
3	Ball Seat	PTFE	1
4	Ball	Brass	1
5	Stem	Brass	2
6	Seal	PTFE	1
7	Impacted Nut	Brass	1
8	O-Ring	NBR	2
9	Lever Handle	Steel	1
10	Stem Nut	Steel	1

PART#	SIZE	I	H	D	L	A	WTG	BOX/CASE	LIST PRICE
940464	1/4"	1.89	1.73	0.39	3.58	0.47	0.51	50/100	---
940465	3/8"	1.89	1.73	0.39	3.35	0.47	0.57	50/100	---
940461	1/2"	2.11	1.80	0.50	3.58	0.51	0.65	30/60	---
940462	3/4"	2.56	2.16	0.74	4.31	0.55	0.99	20/40	---

BOTTOM OUTLET 3 WAY BALL VALVE

- Forged Brass
  Bottom Port is inlet 400 psi
  Side Ports are inlet 100 psi

- Polytetrafluoroethylene ball seats
- Double O-Ring Stem Seals - primary seal is Fluoroelastomer secondary seal is Aflas
- Blow out proof stem
- Made in USA
- Threaded ports
- Good for propane
- Not lead free
- Great for diesel fuel

▪ 90° Handle Rotation

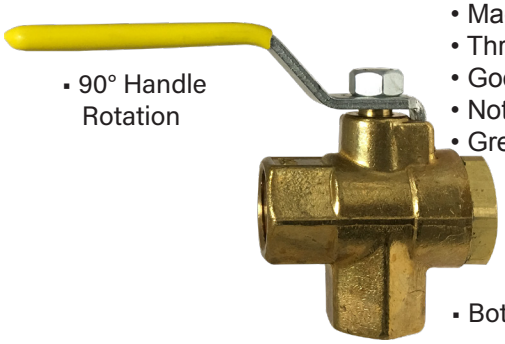

▪ Bottom outlet

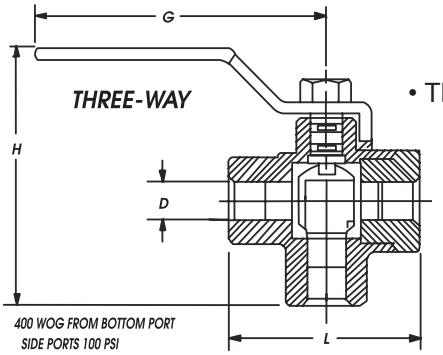

• Threaded

PART#	SIZE	D	G	H	L	CV	WTG	LIST PRICE
940121	1/4"	.44	3.50	3.12	2.25	5.2	0.76	---
940122	3/8"	.50	3.50	3.12	2.25	5.5	0.69	---
940123	1/2"	.50	3.50	3.12	2.25	5.5	1.00	---

WARNING: This product can expose you to chemicals, including lead, which are known to the State of California to cause cancer and birth defects or other reproductive harm. For more information, visit www.P65Warnings.ca.gov

MISCELLANEOUS VALVES
PLUMBING

BRASS BALL VALVE WITH STRAINER

All-in-One design for economical ,compact and convenient .With stamped stainless Steel Screen . 600PSI WOG Forged brass body,Crome plated ball ,PTFE ball seats and cap seal , and rubber o-ring stem seals. Not lead free

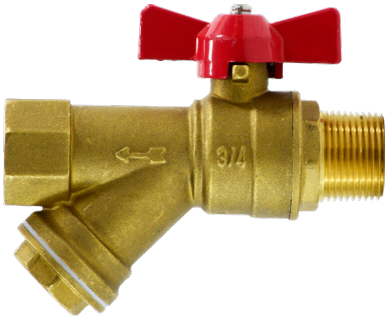

PART #	PART NAME	MATERIAL
1	Body	Brass
2	Caps	Brass
3	Ball	Brass,Cr.Plated
4	Seat	PTFE
5	Filter	SS
6	Gasket	PTFE
7	Caps	Brass
8	Stem	Brass
9	O-Ring	Fluoroelastomer
10	Handle	Zinc
11	Spring Washer	S.S
12	Nut	Steel

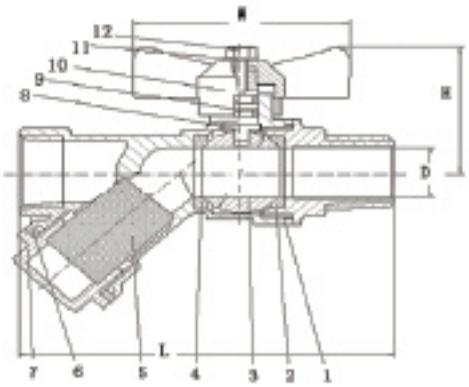

PART #	SIZE	L	D	W	H	WTG	BOX/CASE	LIST PRICE
947133	1/2"x1/2"(MxF)	3.77"	0.59"	2.00"	1.50"	0.60	8/64	---
947134	3/4"x3/4"(MxF)	4.32"	0.75"	2.40"	1.85"	1.00	8/64	---

RADIATOR AIR VALVE

COIN SLOT OR LOSSE KEY

PART #	SIZE	LIST PRICE
943284	1/8" MIP	---
943287	Key only	---

ANGLE SILLCOCKS

3/4" HOSE THREAD OUTLET

- Notched flange for convenient installation.
- Heavy brass construction.
- Cast Iron handle.
- Not lead free

FEMALE IPS

PART #	SIZE	BOX	LIST PRICE
942142	1/2	12	---

HOSE BIBBS
3/4" HOSE THREAD OUTLET

IPS

PART #	SIZE	WTG	BOX/ CASE	LIST PRICE
942170	1/2 (1/2"C)	0.33	10/100	---
942171	3/4	0.35	10/100	---

BENT NOSE GARDEN VALVES

- Heavy brass construction
- Cast iron handle
- Stuffing box
- Neoprene seal disc

PART #	SIZE	BOX	CASE	LIST PRICE
942100	1/2"	12	72	---
942101	3/4"	12	72	---
942102	1"	12	72	---

WARNING: This product can expose you to chemicals, including lead, which are known to the State of California to cause cancer and birth defects or other reproductive harm. For more information, visit www.P65Warnings.ca.gov

BRASS GATE VALVE

• BRASS • 200WOG • FULL PORT

- 200 WOG (cold water, oil, gas).
- Full-port design for a better water flow.
- Screw-in Bonnet - Non-Rising Stem - Solid Wedge
- NPT Threaded ends to ANSI B1.20.1
- Cast iron handle.
- Each valve individually air tested under water.
- Good for diesel fuel.
- Made in Indonesia
- Not lead free
- Temp. 32°-320°F

BRASS GATE VALVES IPS

PART#	SIZE	L	H	D1	D	T	S1	WEIGHT	BOX/CASE	LIST PRICE
940130	1/4	1.64	2.91	2.09	0.44	1/4-18 NPT	.85	0.60	10/120	---
940131	3/8	1.71	2.91	2.09	0.48	3/8-18 NPT	.85	0.59	10/120	---
940132	1/2	1.71	2.91	2.09	0.50	1/2-14 NPT	1.03	0.75	10/120	---
940133	3/4	1.71	3.06	2.13	0.74	3/4-14 NPT	1.26	0.83	10/80	---
940134	1	2.13	3.60	2.48	0.97	1-11.5 NPT	1.51	1.24	5/60	---
940135	1-1/4	2.24	4.50	2.66	1.22	1-1/4-11.5 NPT	1.89	1.69	5/40	---
940136	1-1/2	2.44	5.08	3.15	1.45	1-1/2-11.5 NPT	2.17	2.17	5/30	---
940137	2	2.70	5.94	3.52	1.85	2-11.5 NPT	2.60	3.30	2/12	---
940138	2-1/2	3.70	7.87	3.98	2.48	2-1/2-8 NPT	3.27	6.26	1/10	---
940139	3	4.02	8.82	4.37	2.80	3-8 NPT	3.86	8.26	1/4	---
940140	4	4.53	9.88	4.74	3.60	4-8 NPT	4.88	13.09	1/4	---

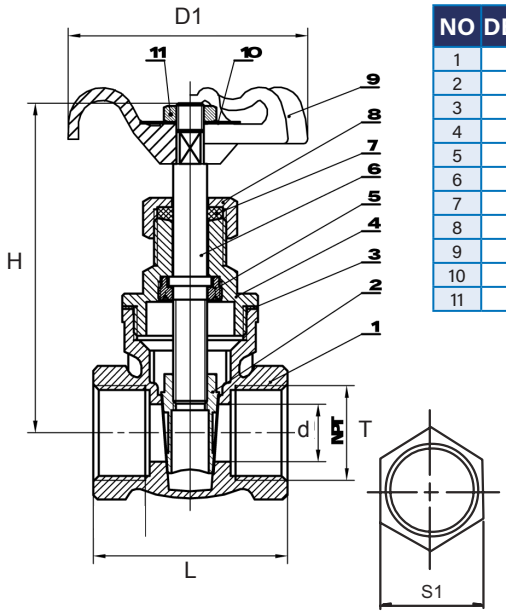

NO	DESCRIPTION	MATERIAL
1	Body	C85700
2	Disk	C85700
3	Seat	PTFE
4	Cap	C85700
5	Packing	C85700
6	Stem	C85700
7	Rubber Seat	NBR
8	Packing Nut	C85700
9	Handle	Cast Iron
10	Nameplate	AL
11	Stem Nut	SAE 1010R

Crown handle
1/2-1/4

X handle
1/2-1/4

Add "*C*" to part# for Crown handle, "*X*" for X handle.

Also Available SS Gate Valve

See Lead Free for lead free Gate Valves.

WARNING: This product can expose you to chemicals, including lead, which are known to the State of California to cause cancer and birth defects or other reproductive harm. For more information, visit www.P65Warnings.ca.gov

BRONZE IPS GATE VALVE

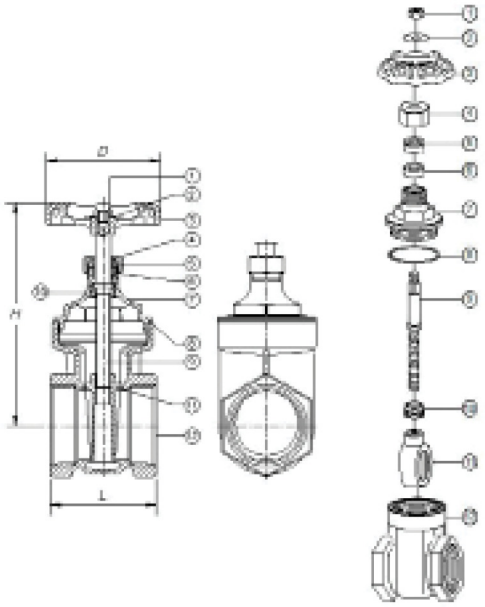

BRONZE GATE VALVE

NUMBER	PART	MATERIALS	NOTE
1	NUT	HOT ROLLED (SAE 1010R)	
2	NAME PLATE	ALUMINUM	
3	HANDLE	CAST IRON (JIS Z22202)	
4	PACKING NUT	BRASS ROD (C37700)	
5	GLAND RING	BRASS ROD (C37700)	Size 1-1/4" ~ 4"
6	PACKING	GRAPHITE (LK 33 NAFG)	
7	BONNET	CAST BRONZE (C83600)	
8	PACKING	FIBRE	Size 2" ~ 4"
9	STEM	BRASS ROD (C37700)	Size 1/4" ~ 2"
		CAST BRONZE (C83600)	Size 2-1/2" ~ 4"
10	LOCKNUT	BRASS ROD (C37700)	
11	DISC	CAST BRONZE (C83600)	
12	BODY	CAST BRONZE (C83600)	

PART#	SIZE	DIMENSION (MM)		
		D	H	L
939132	1/2" FIP	53	74	43.5
939133	3/4" FIP	54	84	46
939134	1" FIP	63	99	54
939135	1-1/4" FIP	69	117	57
939136	1-1/2" FIP	80	129	62
939137	2" FIP	89.5	152	68.5
939138	2-1/2" FIP	101	200	94
939139	3" FIP	111	224	102
939140	4" FIP	127	251	115

WARNING: This product can expose you to chemicals, including lead, which are known to the State of California to cause cancer and birth defects or other reproductive harm. For more information, visit www.P65Warnings.ca.gov

QUICK OPENING GATE VALVE

PLUMBING

GATE VALVE QUICK OPENING

FEATURES: BRONZE MATERIAL, THREADED ENDS, 200 WOG

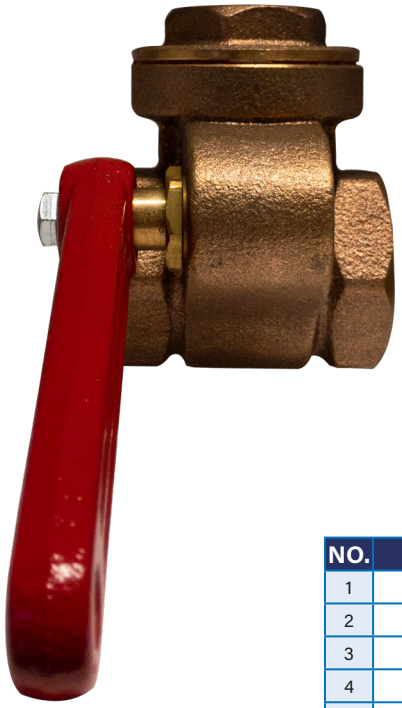

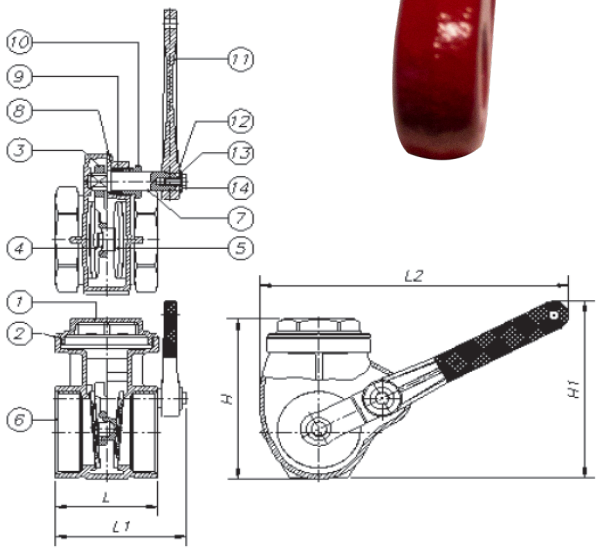

MATERIAL SPECIFICATION

NO.	PART	BRONZE
1	BONNET	BRASS (C85700)
2	PACKING	FIBRE
3	ARM	BRASS (C85700)
4	DISC MALE	BRASS (C85700)
5	DISC FEMALE	BRASS (C85700)
6	BODY	BRASS (C85700)
7	STEM	BRASS (C37700)
8	WASHER	BRASS (C37700)
9	PACKING	Polytetrafluoroethylene POLYFLON(PTFE M-392)
10	PACKING NUT	BRASS (C37700)
11	HANDLE	CAST IRON (JIS ZZ2202) RUBBER COATING BRASS (C85700)
12	NAME PLATE	ALUMINIUM (A1100)
13	WASHER	HOT ROLLED (SAE 1010R)
14	HANDLE BOLT	HOT ROLLED (SAE 1010R)

PART #	SIZE	L	L1	L2	H	H1	BOX	CASE	LIST PRICE
941133	1/2"	45.6	60.6	119	56.8	52.8	10	50	---
941134	3/4"	51	62	126.3	68	87.5	10	50	---
941135	1"	58.3	72.3	155	78.7	90.2	10	30	---
941136	1-1/4"	30.1	78	180.2	89.5	104	5	25	---
941137	1-1/2"	66.7	85.3	196.6	99.2	131	6	18	---
941138	2"	76.4	90.3	250.6	119.3	143.7	2	10	---
941140	3"	101	129.2	305.6	172.2	191.3	2	6	---
941141	4"	114.5	150.7	378.2	213.5	248.6	1	2	---

WARNING: This product can expose you to chemicals, including lead, which are known to the State of California to cause cancer and birth defects or other reproductive harm. For more information, visit www.P65Warnings.ca.gov

CLASS 150 BRASS Y-PATTERN STRAINER

- Forged Brass body, size 1/4"-3".
- Pressure rating: 250 WOG (water, oil, gas)/PN25
  125 WSP (Saturated Stem)
- NPT Threaded ends to ANSI B1.20.1
- Protects regulators, pumps, meters and other controls from damage due to sediment scale, metal chips or other foreign materials.
- Screwed cap is threaded & gasketed.
- Tapped drain plug opening in cap.
- 304 stainless steel screen #20 mesh.
- Self cleaning.
- Self cleaning can be accomplished by opening the valve or plug connected to the blow-off outlet.
- Made in Indonesia
- NOT LEAD FREE
- w/20 Mesh Screen
- Temp 180°F

PART#	SIZE	L	H	C (PLUG)	WEIGHT	BOX/CASE	LIST PRICE
940521	1/4"	2.57	1.95	NPT 3/8	.53	10/100	---
940522	3/8"	3.23	2.44	NPT 3/8	.71	12/48	---
940523	1/2"	3.23	2.44	NPT 3/8	.66	12/48	---
940524	3/4"	3.94	2.78	NPT 3/8	1.10	8/32	---
940525	1"	4.53	3.19	NPT 1/2	1.71	8/32	---
940526	1-1/4"	5.33	3.66	NPT 1/2	2.49	6/24	---
940527	1-1/2"	6.20	3.82	NPT 1/2	3.24	2/16	---
940528	2"	7.44	4.65	NPT 1/2	5.39	2/8	---
940530	3"	9.4	5.67	NPT 3/4	13.49	1/4	---

Add 'S' to part # for replacement screens

See Lead Free for 1/2" Lead Free

See SS Y Strainer

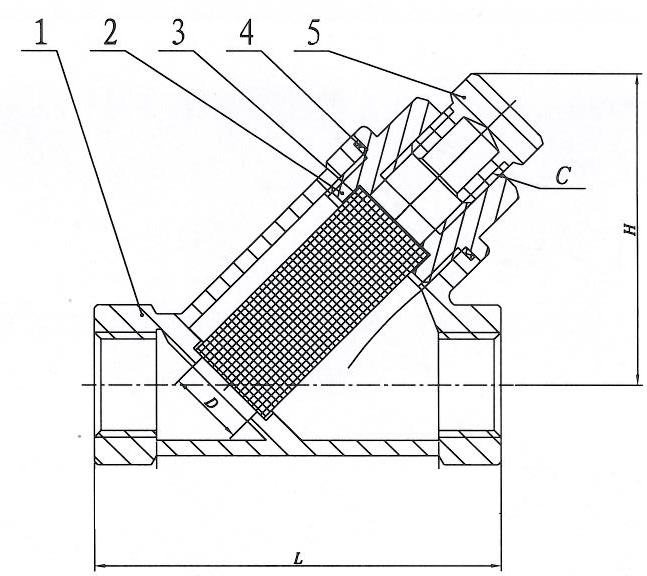

NO	NAME	MATERIAL
1	BODY	C85700
2	BONNET	C85700
3	STRAINER	304 S.S.
4	SPRING SEAL	PTFE
5	END CAP	C85700

WARNING: This product can expose you to chemicals, including lead, which are known to the State of California to cause cancer and birth defects or other reproductive harm. For more information, visit www.P65Warnings.ca.gov

BRASS SWING CHECK VALVES

PLUMBING

BRASS SWING CHECK VALVES

- Working pressure non-shock: 200 psi W.O.G. (cold water, oil, gas) 125 psi WSP (saturated steam)
- Swing type disc.
- Screwed Cap.
- Hard Seat.
- 90⁰ Straight Pattern.
- Used to prevent reverse flow in commercial and industrial applications.
- Threaded ends to ANSI B1.20.1
- Integral seat.
- Temp range -5° - 150F°
- NOT LEAD FREE
- Cracking pressure 3-5 psi
- Made in Indonesia

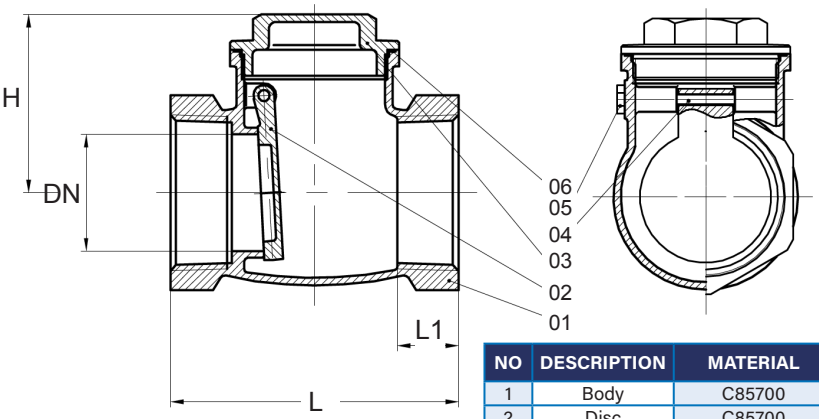

NO	DESCRIPTION	MATERIAL
1	Body	C85700
2	Disc	C85700
3	Cap	C85700
4	Brass Bar	C85700
5	Screw	C85700
6	Gasket	Fibre H

CAST BRASS SWING CHECK VALVES IPS SCREWED ENDS

PART #	SIZE	L	H	L1	DN	WEIGHT	BOX/CASE	LIST PRICE
940352	1/2	2.09	1.42	0.531	0.512	.41	10/100	---
940353	3/4	2.36	1.56	0.579	0.728	.56	10/80	---
940354	1	2.62	1.77	0.748	0.925	.80	8/40	---
940355	1-1/4	3.19	2.07	0.748	1.201	1.36	5/40	---
940356	1-1/2	3.54	2.16	0.846	1.417	1.56	5/20	---
940357	2	4.21	2.74	0.886	1.772	2.61	2/16	---
940358	2-1/2	5.14	3.09	1.063	2.224	4.55	1/8	---
940359	3	5.77	3.80	1.102	2.579	6.53	1/6	---
940360	4	6.84	4.25	1.102	3.602	10.18	1/4	---

See Lead Free Brass Swing Check Valves

SEE SS SWING CHECK VALVES

WARNING: This product can expose you to chemicals, including lead, which are known to the State of California to cause cancer and birth defects or other reproductive harm. For more information, visit www.P65Warnings.ca.gov

BRASS CHECK VALVES

S.S. SPRING LOADED BRONZE POPPET - For positive sealing & self-cleaning. Insures against leakage.

- Inline Lift Type - Resilient Discs - Spring Actuated - Threaded.
- Presure rating: 200 WOG (water, oil, gas) / 125 WSP (Saturated Steam)
- Spring in stainless steel AISI 304. • Resilient washer hold/ disc in brass. • Forged Brass Body for 1/2"-2"
- Corrosion resistant material. • Can be used vertically or horizontally. • Opens & Closes with flow of media.
- No cracking pressure. • NOT LEAD FREE • Made in Indonesia

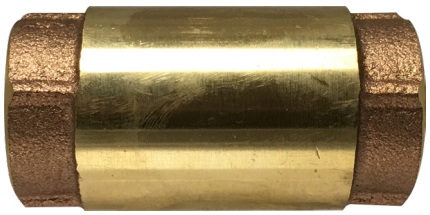

1/4 Made in Taiwan

Temp Range
-10°C - 110°C
14°F - 248°F

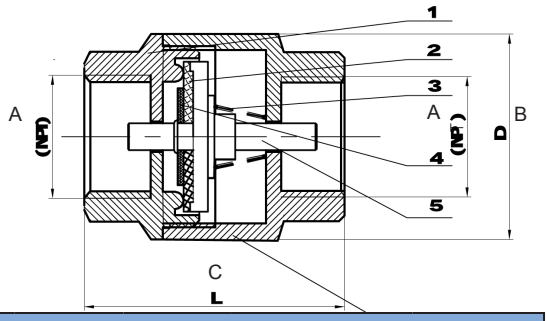

BRASS CHECK VALVE (INCHES)								
PART#	SIZE	ENTERS PIPE SIZE	A NPT	B	C	WEIGHT	BOX/CASE	LIST PRICE
944428	1/4"	-	1/4"	1.00	2.29	.24	24/192	---
944429	3/8"	-	3/8"	1.00	2.07	.23	10/100	---
944430	1/2"	1-1/4"	1/2"	1.26	2.40	.42	10/100	---
944431	3/4"	1-1/4"	3/4"	1.45	2.74	.53	10/80	---
944432	1"	2"	1"	1.77	3.23	.85	6/48	---
944433	1-1/4"	2-1/2"	1-1/4"	2.13	3.62	1.18	4/40	---
944434	1-1/2"	3"	1-1/2"	2.29	4.04	1.40	5/30	---
944435	2"	3-1/2"	2"	2.48	5.04	2.70	5/20	---

▪ See Lead Free Brass Check Valves

▪ See SS Check Valves

IN LINE CHECK VALVES VERTICAL OR HORIZONTAL

▪ Working Pressure: 250 PSI ▪ Temperature Range: -40° to 450°F(-40°to 230°C)
▪ Cracking Pressure: 3 PSI ▪ Made in China ▪ Not lead free
▪ Applications:Air Compressor Discharge Lines, may also used on water or oil lines
▪ Construction:Cast Bronze Body,Corrosion Resistant Stainless Steel Spring to Ensure Long Life,15% Glass Filled ▪ Polytetrafluoroethylene Poppet,C360 Machined Brass Cap,1/8 NPT Unloader Port is Standard ▪ Repairable

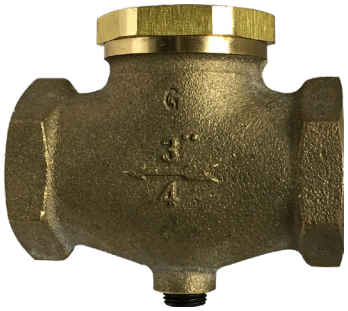

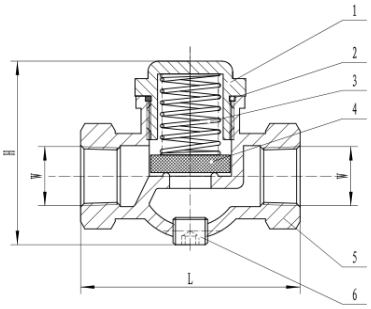

PART#	PART NAME	MATERIAL
6	Plug	Brass
5	Body	Bronze
4	Gasket	PTPF
3	Spring	S.Steel
2	O-ring	HNBR
1	Cap	Brass

PART #	SIZE	W	L	H	WTG	BOX/CASE	LIST PRICE
947142	3/8"	3/8	2.50	2.18	0.62	10/50	---
947143	1/2"	1/2	2.50	2.13	0.54	10/50	---
947144	3/4"	3/4	2.88	2.64	1.17	8/40	---
947145	1"	1	3.61	3.30	1.98	2/20	---

WARNING: This product can expose you to chemicals, including lead, which are known to the State of California to cause cancer and birth defects or other reproductive harm. For more information, visit www.P65Warnings.ca.gov

BRASS IN-LINE CHECK VALVES

Y-PATTERN STRAINER

High Capacity, Size 1/4"-2" 400 WOG, 2 1/2"-4" 175 WOG

- Soft Seat for Bubble Tight Shutoff, Spring Loaded for Fast Seating Action.
- Compact design.
- Low Cracking Pressure 1/2 psi.
- Flow Profile Designed to Minimize Head Loss.
- Perfect Seating both at High and Low Pressure, Wide Temperature Range: +10° to 210°F.
- Polyethermide Disc to ensure the Best Resistance For Corrosion and Abrasion.
- Patented Disc Guide to Prevent Any Side Loading.
- Connection: FNPT x FNPT.
- Made in Italy • Not lead free

NBR for water, oils and general purpose.

With Fluoroelastomer® Seal for fuels and hydrocarbons. Max working TEMPERATURE 325°F/125 psi steam

Add V to part# for Fluoroelastomer

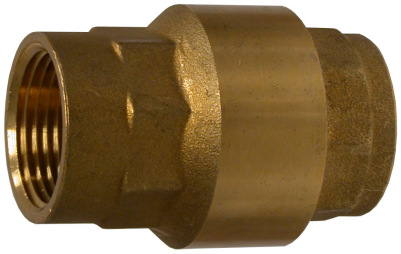

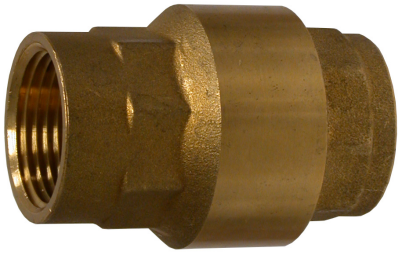

BRASS IN-LINE CHECK								
PART#	LIST PRICE	SIZE	I	PSI	LBS	CASE	FLUOR PART#	LIST PRICE
944401	---	1/4"	0.39	400	0.22	144		
944402	---	3/8"	0.40	400	0.18	144	944402V	---
944403	---	1/2"	0.60	400	0.32	144	944403V	---
944404	---	3/4"	0.65	400	0.49	90	944404V	---
944405	---	1"	0.66	400	0.71	90	944405V	---
944406	---	1-1/4"	0.68	400	1.13	30	944406V	---
944407	---	1-1/2"	0.68	400	1.53	30	944407V	---
944408	---	2"	0.69	400	2.28	12	944408V	---
944409	---	2-1/2"	0.93	175	4.83	4	944409V	---
944410	---	3"	1.01	175	6.70	4	944410V	---
944411	---	4"	1.09	175	12.43	2	944411V	---

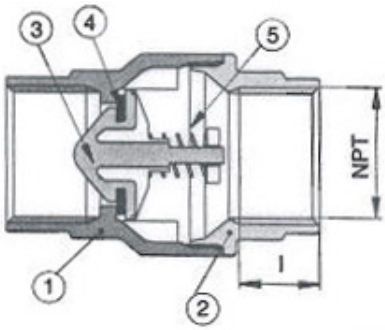

NO	PART	MATERIAL	PCS
1	Body	Brass	1
2	End Connection	Brass	1
3	Disc	Polyetherimide	1
4	Seat	100002 Nbr	1
		100003 Fluoroelastomer	1
5	Spring	Stainless Steel	1

WARNING: This product can expose you to chemicals, including lead, which are known to the State of California to cause cancer and birth defects or other reproductive harm. For more information, visit www.P65Warnings.ca.gov

316 SS 2-PC BALL VALVE, FULL PORT, THREADED END, 2000 PSI

- Investment Castings for body and cap.
- Internal Entry blow-out proof stem.
- Pressure rating: 2000PSI.
- Threaded Ends: ANSI B2,1
- Material: CF8M (316SS)
- Pressure test: API 598
- Generic Handles

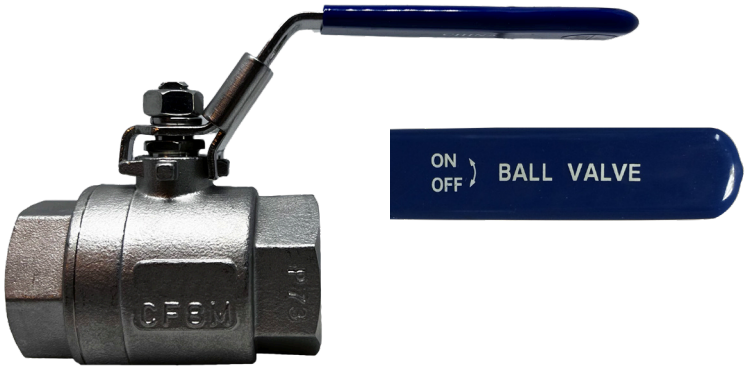

LOCKING HANDLE

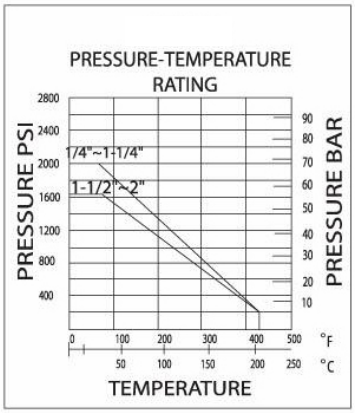

PART#	SIZE	D	L	H	W	N.M	LBS/ PC	CASE	LIST PRICE
949171	1/4"	0.36	2.13	2.13	4.33	.157	0.64	80	---
949172	3/8"	0.50	2.13	2.16	4.33	.157	0.58	80	---
949173	1/2"	0.59	2.24	2.28	4.53	.197	0.71	70	---
949174	3/4"	0.79	2.76	2.40	4.53	.315	1.18	50	---
949175	1"	0.98	3.50	3.03	6.04	.394	2.33	30	---
949176	1-1/4"	1.25	4.12	3.19	6.04	.551	3.48	20	---
949177	1-1/2"	1.50	4.05	3.54	6.10	.709	4.03	14	---
949178	2"	1.96	4.90	4.25	6.10	.984	7.50	7	---

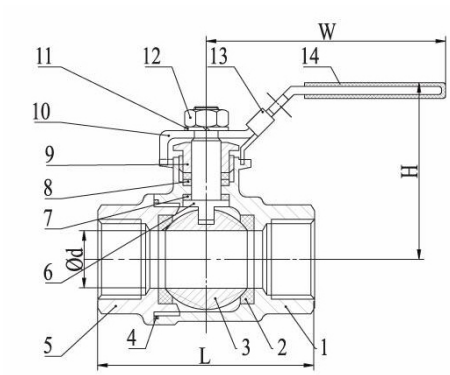

NO	PART	MATERIAL	QTY
1	BODY	316SS	1
2	BALL SEAT	PTFE	2
3	BALL	316SS	1
4	BODY SEAL	PTFE	1
5	CAP	316SS	1
6	STEM	SS316	1
7	THRUST WASHER	PTFE	1
8	PACKING	PTFE	1
9	GLAND NUT	SS304	1
10	HANDLE	SS304	1
11	WASHER	SS304	1
12	NUT	SS304	1
13	LOCK DEVICE	SS304	1
14	HANDLE COVER	PLASTIC	1

WARNING: This product can expose you to chemicals, including lead, which are known to the State of California to cause cancer and birth defects or other reproductive harm. For more information, visit www.P65Warnings.ca.gov

316 SS STANDARD PORT VALVES

PLUMBING

ONE PIECE STANDARD PORT BALL VALVE

316 Stainless Steel
1000 PSI

- Manufactured for harsh environments with female NPT threads.
- Locking handle for greater security.
- Standard port has restricted flow.
- Made with corrosion resistant stainless steel materials.
- PTFE seat and seals.
- Investment Castings for Body and Cap.
- Internal Entry Blow-out proof stem.
- Pressure rating: 1000PSI (PN63)
- Threaded Ends: ANSI B2.1
- Material: CF8M
- Pressure Test: API 598
- Generic handles

LOCKING HANDLE

Valves will accept a pad-lock on the handle.

DIMENSIONS (INCHES)

PART#	SIZE	D	L	H	W	WEIGHT	CASE	LIST PRICE
949101	1/4"	0.20	1.53	1.53	3.03	0.19	150	---
949102	3/8"	0.27	1.74	1.53	3.03	0.23	150	---
949103	1/2"	0.36	2.24	1.73	3.46	0.41	100	---
949104	3/4"	0.50	2.32	1.89	3.46	0.63	70	---
949105	1"	0.59	2.80	2.24	4.29	0.86	50	---
949106	1-1/4"	0.79	3.07	2.32	4.29	1.34	30	---
949107	1-1/2"	0.98	3.26	2.76	5.14	2.00	25	---
949108	2"	1.25	3.94	2.24	6.50	2.88	15	---

Larger sizes available on special order basis

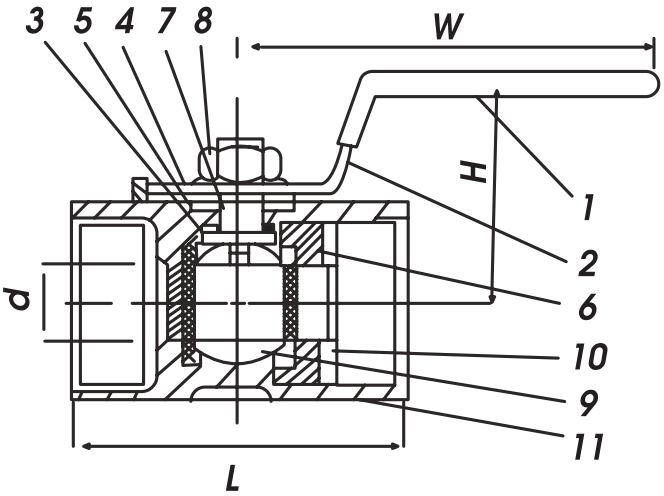

ITEM	PARTS	MATERIAL
1	Plastic Cover	Plastic
2	Handle	AISI 304 SS
3	Thrust Washer	PTFE
4	Packing Ring	AISI 304 SS
5	Stem Packing	PTFE
6	Seat	PTFE
7	Seat	AISI 316 SS
8	Stem Nut	AISI 304 SS
9	Ball	316SS ASTM-A351 CF8M
10	Cap	316SS ASTM-A351 CF8M
11	Body	316SS ASTM-A351 CF8M

SS = STAINLESS STEEL

WARNING: This product can expose you to chemicals, including lead, which are known to the State of California to cause cancer and birth defects or other reproductive harm. For more information, visit www.P65Warnings.ca.gov

316 SS TWO PIECE FULL PORT VALVES

PLUMBING

TWO PIECE FULL PORT BALL VALVE

316 Stainless Steel

1000 PSI

Materials: CFM8M (SS316)

Features:

- Quality manufactured for harsh environments.
- Corrrosion resistant.
- Investment Casting body
- Working pressure 1000 psi for W.O.G.
- Adjustable stem packing
- Pure Polytetrafluoroethylene seals and seats
- Temperature range: -60 to 450°F
- Blow-out proof stem and safe pressure-reducing ho
- 100% leakage tested at 100 psi air under water
- Hydrostatic test pressure: 1500 psi
- Locking handle w/ blue generic sleeve
- 125 Steam rated
- Generic Handles

Valves will accept a pad-lock on the handle.

dimensions (inches)

PART#	SIZE	D	L	H	W	WEIGHT	CASE	LIST PRICE
949161	1/4"	0.36	2.13	2.13	4.33	0.51	80	---
949162	3/8"	0.50	2.13	2.16	4.33	0.49	80	---
949163	1/2"	0.59	2.24	2.28	4.17	0.69	70	---
949164	3/4"	0.79	2.68	2.40	4.17	1.03	50	---
949165	1"	0.98	3.15	2.50	4.88	1.40	30	---
949166	1-1/4"	1.26	3.58	3.19	5.04	2.17	20	---
949167	1-1/2"	1.49	4.05	3.54	6.10	3.33	12	---
949168	2"	1.97	4.88	4.25	6.13	6.02	7	---
949170	3"	3.15	7.28	5.71	9.06	21.01	2	---
949180	4"	3.94	8.84	7.28	11.10	36.18	1	---

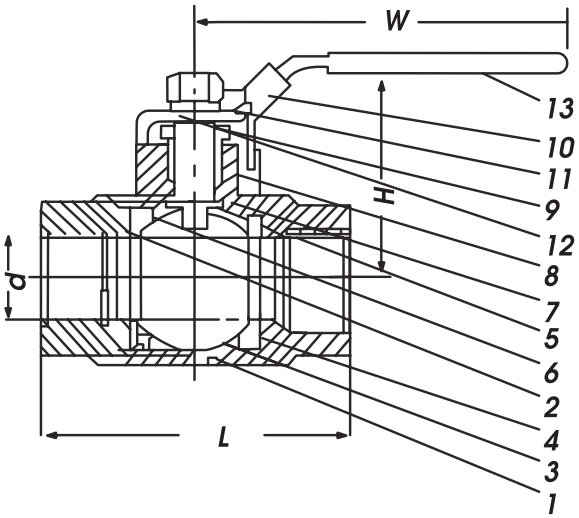

ITEM	PARTS	MATERIAL
1	Body	316SS ASTM-A351 CF8M
2	Body Cap	316SS ASTM-A351 CF8M
3	Ball	316SS ASTM-A351 CF8M
4	Seat	Reinforced PTFE
5	Stem	AISI 316 SS
6	Seal	Reinforced PTFE
7	Thrust Washer	Reinforced PTFE
8	Packing	Reinforced PTFE
9	Gland Nut	AISI 304SS
10/11	Nut & Washer	AISI 304SS
12	Handle	AISI 304SS
13	Plastic Cover	Plastic

SS = Stainless Steel

WARNING: This product can expose you to chemicals, including lead, which are known to the State of California to cause cancer and birth defects or other reproductive harm. For more information, visit www.P65Warnings.ca.gov

316 SS MINI BALL VALVES

PLUMBING

STAINLESS STEEL MINI BALL VALVES

- 316 Stainless Steel
- Working pressure 400PSI
- Working Temperature -10°C to 150°C

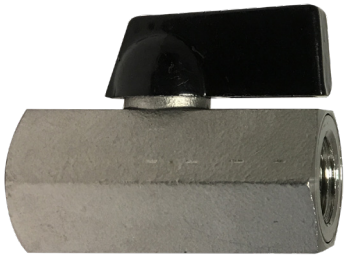

FEMALE PIPE X FEMALE PIPE

PART#	SIZE	W	D	H	L	WEIGHT	CASE	LIST PRICE
46934SS	1/8"	.898	.197	.985	1.693	.18	150	---
46935SS	1/4"	.898	.276	.984	1.693	.21	150	---
46936SS	3/8"	.898	.276	.984	1.693	.19	150	---
46937SS	1/2"	.898	.362	1.114	1.811	.26	100	---

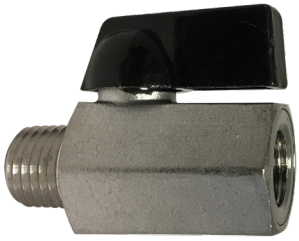

MALE PIPE X FEMALE PIPE

PART#	SIZE	W	D	H	L	WEIGHT	CASE	LIST PRICE
46930SS	1/8"	.898	.197	.985	1.693	.18	150	---
46931SS	1/4"	.898	.276	.984	1.693	.18	150	---
46932SS	3/8"	.898	.276	.984	1.693	.19	150	---
46933SS	1/2"	.898	.362	1.114	1.811	.26	100	---

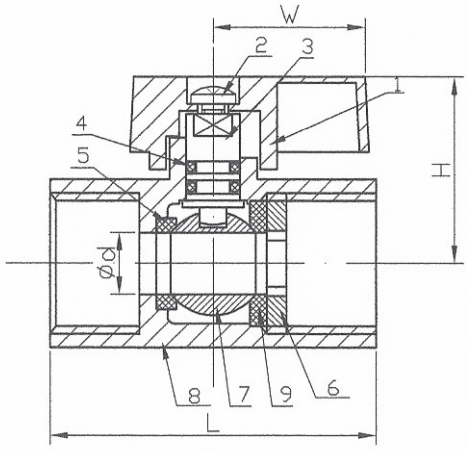

NO	PART	MATERIAL	QTY
1	LEVER	ALUMINIUM ALLOY	1
	HANDLES	PLASTIC	
2	BOLT	304	1
3	STEM	304/ 316	1
4	"O" RING	NBR	1~2
5	BALL SEAT (A)	PTFE	1
6	CAP	CF8/ CF8M	1
7	BALL	CF8/ CF8M	1
8	BODY	CF8/ CF8M	1
9	BALL SEAT (B)	PTFE	1

WARNING: This product can expose you to chemicals, including lead, which are known to the State of California to cause cancer and birth defects or other reproductive harm. For more information, visit www.P65Warnings.ca.gov

316 SS MINI BALL VALVES

PLUMBING

MINI STAINLESS STEEL BALL VALVE ,WITH BUTTERFLY HANDLE

1000PSI WOG , 150PSI WSP
Temperature Range: -36°F to + 368°F
Full Port for 1/4" , Standard port for 3/8" and 1/2"
316 Stainless Steel body and Ball
Polytetrafluoroethylene seats and sealing

- Fluoroelastomer O-Ring
- #316 Stainless Steel
- Made in China

FEMALE PIPE X FEMALE PIPE

PART #	SIZE FIP X FIP	DIMENSIONS IN						
		D	L	B (HEX)	H	WTG	BOX	
46922SS	1/4"×1/4"	0.314"	2.34"	22.1/0.87"	1.5"	0.33	36	---
46923SS	3/8"×3/8"	0.314"	2.39"	22.1/0.87"	1.5"	0.39	36	---
46924SS	1/2"×1/2"	0.314"	2.81"	24.9/0.98"	1.5"	0.43	36	---

MALE PIPE X FEMALE PIPE

PART #	SIZE MIP X FIP	DIMENSIONS IN						
		D	L	B (HEX)	H	WTG	BOX	
46903SS	1/4"×1/4"	0.314"	2.45"	0.87"	1.5"	0.39	36	---
46904SS	3/8"×3/8"	0.314"	2.45"	0.87"	1.5"	0.36	36	---
46905SS	1/2"×1/2"	0.314"	2.81"	0.98"	1.5"	0.41	36	---

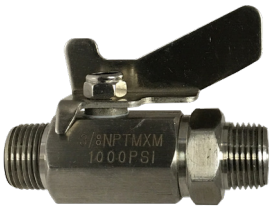

MALE PIPE X MALE PIPE

PART #	SIZE MIP X MIP	DIMENSIONS IN						
		D	L	B (HEX)	H	WTG	BOX	
46912SS	1/4"×1/4"	0.314"	2.59"	0.87"	1.5"	0.33	36	---
46913SS	3/8"×3/8"	0.314"	2.65"	0.87"	1.5"	0.34	36	---

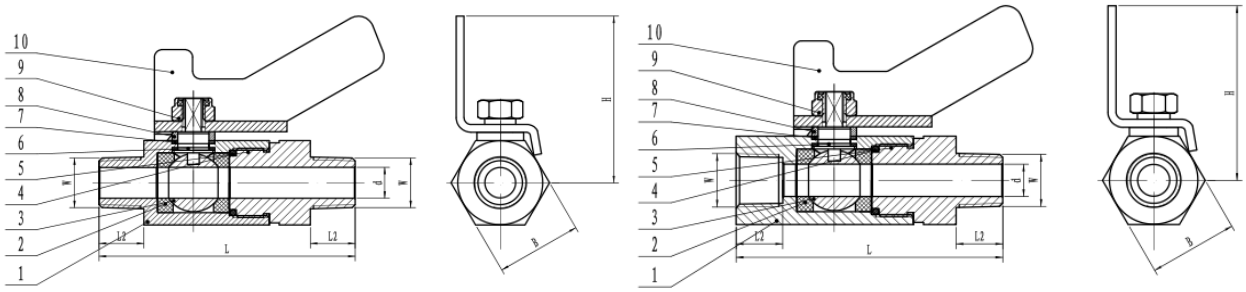

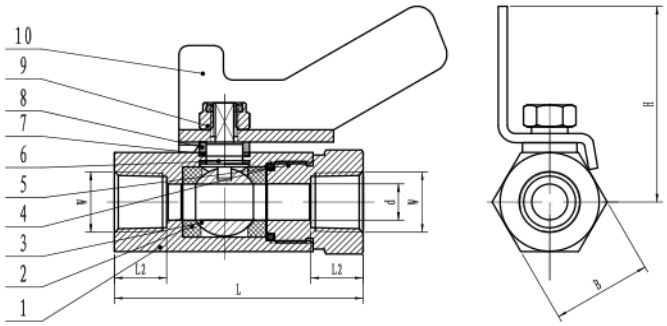

PART #	PART NAME	MATERIAL
1	Body	S316
2	Seat	PTFE
3	Ball	S316
4	O-Ring	Fluoroelastomer
5	Cap	S316
6	Stem	S316
7	Stem Bottom Seal	PTFE
8	Stem Up Seal	PTFE
9	Nut	Steel
10	Handle	Steel

WARNING: This product can expose you to chemicals, including lead, which are known to the State of California to cause cancer and birth defects or other reproductive harm. For more information, visit www.P65Warnings.ca.gov

304 SS CHECK VALVES

PLUMBING

#304 STAINLESS STEEL CHECK VALVE

- No Lead.
- Water wells need a check valve installed above the pumps between lengths of drop pipes.
- Opens & Closes with flow of media.
- No cracking pressure.
- Working pressure unavailable.
- Made in Taiwan

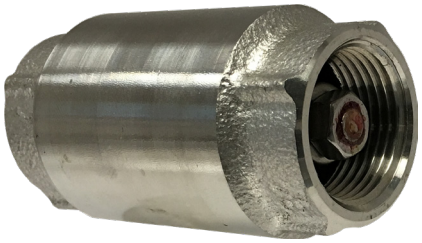

DIMENSIONS (INCHES)						
PART#	SIZE	A NPT	B	C	BOX/CASE	LIST PRICE
949430	1/2"	1/2"	1.26	2.43	10/100	---
949431	3/4"	3/4"	1.50	2.72	10/80	---
949432	1"	1"	1.77	3.23	10/60	---

More sizes available on a special order basis.

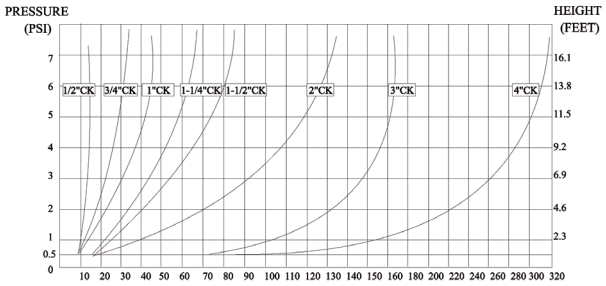

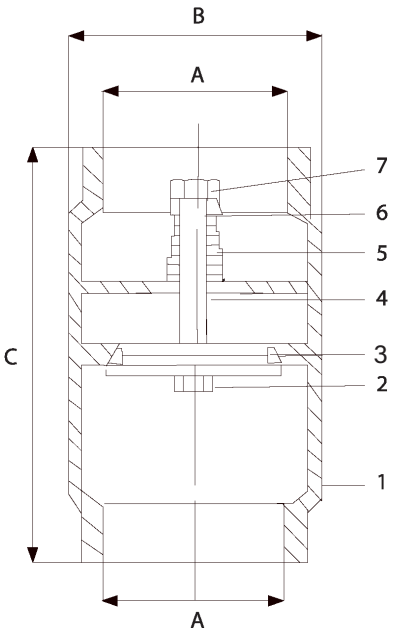

NO	PART	MATERIAL
1	Body	S.S 304
2	Stopper	S.S 304
3	O-Ring	Fluor
4	Washer	PE
5	Spring	S.S 304
6	Cap	S.S 304
7	Nut	S.S 304

FLUOR* ABBREVIATION FOR FLUOROELASTOMER

WARNING: This product can expose you to chemicals, including lead, which are known to the State of California to cause cancer and birth defects or other reproductive harm. For more information, visit www.P65Warnings.ca.gov

STAINLESS STEEL IN-LINE CHECK VALVE

Y-PATTERN STRAINER

High Capacity, Size 1/4"-2" 800 WOG

- Soft PTFE Seat for Bubble Tight Shutoff, Spring Loaded for Fast Seating Action
- Low Cracking Pressure 1/2 psi.
- Flow Profile Designed to Minimize Head Loss.
- Perfect Seating both at High and Low Pressure, Wide Temperature Range: +10° to 450°F.
- Corrosion Resistant-Excellent for use on Chemicals.
- ASTM A351-CF8M Investment Casting.
- Connection: FNPT x FNPT.
- 125WSP Saturated Steam.
- ANSI B1.20.1 Threads.
- Dual Guided Stem & Disc.
- Made in Italy

STAINLESS STEEL IN-LINE CHECK						
PART#	SIZE	D	L	PSI	LBS	LIST PRICE
949401	1/4"	1.15	2.25	800	0.36	---
949402	3/8"	1.16	2.25	800	0.34	---
949403	1/2"	1.35	2.31	800	0.40	---
949404	3/4"	1.81	2.87	800	0.85	---
949405	1"	2.13	3.50	800	1.30	---
949406	1-1/4"	2.46	4.18	800	2.50	---
949407	1-1/2"	2.88	4.93	800	3.40	---
949408	2"	3.56	6.00	800	6.0	---

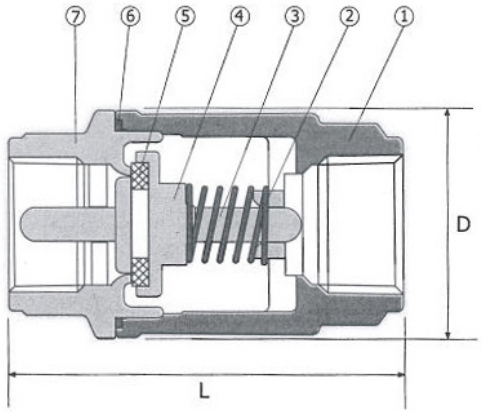

NO	PART	MATERIAL	PCS
1	BODY	ASTM A351-CF8M	1
2	SPRING	SS316	1
3	CENTER GUIDE	ASTM A351-CF8M	1
4	DISC	ASTM A351-CF8M	1
5	SEAT	PTFE	1
6	GASKET	PTFE	1
7	END CAP	ASTM A351-CF8M	1

WARNING: This product can expose you to chemicals, including lead, which are known to the State of California to cause cancer and birth defects or other reproductive harm. For more information, visit www.P65Warnings.ca.gov

316 SS SPRING CHECK VALVES

PLUMBING

SPRING CHECK VALVE

- Working Pressure: 1500PSI (PN100)
- Working Temperature: -10 -150°C
- Opening Pressure: 2~3PSI
- Suitable Medium: W.O.G.
- Threaded End: NPT
- Made in China

FEMALE PIPE X FEMALE PIPE

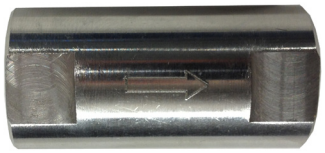

PART#	SIZE	L	C	D	B	E	LBS/ PC	CASE	LIST PRICE
949451	1/4"	2.165	.217	.748	.699	.394	.19	200	---
949452	3/8"	2.165	.295	.866	.787	.394	.21	160	---
949453	1/2"	2.165	.413	1.063	.945	.472	.31	100	---
949454	3/4"	2.677	.591	1.417	1.26	.472	.71	60	---
949455	1"	3.268	.787	1.693	1.496	.591	1.14	36	---

MALE PIPE X FEMALE PIPE

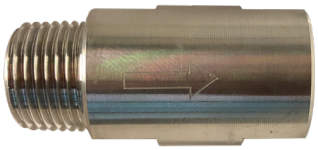

PART#	SIZE	L	C	D	B	E	LBS/ PC	CASE	LIST PRICE
949471	1/4"	2.165	.217	.748	.699	.394	.176	200	---
949472	3/8"	2.165	.295	.866	.787	.394	.22	160	---
949473	1/2"	2.165	.413	1.063	.945	.472	.27	100	---
949474	3/4"	2.677	.591	1.417	1.26	.472	.62	65	---

FLOWS MALE -> FEMALE

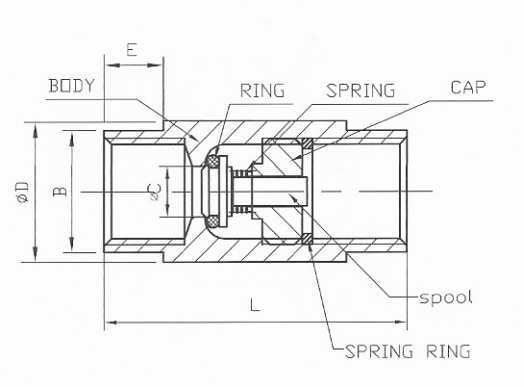

NO	PART	MATERIAL	QTY
1	BODY	316	1
2	RING	Rubber	1
3	SPRING	304	1
4	CAP	CF8M	1
5	SPOOL	304/316	1
6	SPRING RING	304	1

WARNING: This product can expose you to chemicals, including lead, which are known to the State of California to cause cancer and birth defects or other reproductive harm. For more information, visit www.P65Warnings.ca.gov

SS Y-SPRING/ BARREL CHECK VALVES

PLUMBING

Y-SPRING CHECK VALVE

- Working Pressure: 800PSI (PN55)
- Working Temperature: -10 -150°C
- Opening Pressure: 1.5PSI
- Suitable Medium: W.O.G.
- Made in China

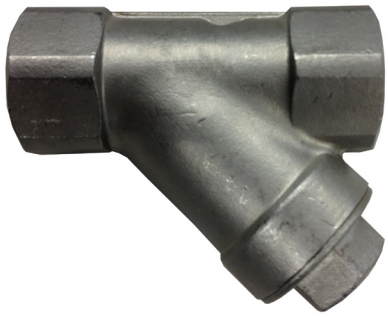

PART#	SIZE	L	H	D	LBS/ PC	CASE	LIST PRICE
949483	1/2"	2.559	1.634	.591	.51	100	---
949484	3/4"	3.15	2.067	.787	.93	80	---
949485	1"	3.543	2.657	.984	1.25	40	---
949486	1-1/4"	4.134	2.795	1.26	2.20	30	---
949487	1-1/2"	4.724	3.169	1.575	3.24	24	---
949488	2"	5.512	3.74	1.969	5.21	10	---

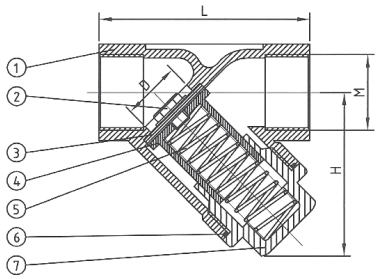

NO	PART	MATERIAL	QTY
1	BODY	CF8M/ CF8	1
2	BOLT	304	1
3	SEAT	Polytetrafluoroethylene	1
4	DISC	304	1
5	SPRING	304	1
6	GASKET	Polytetrafluoroethylene	1
7	CAP	CF8M/ CF8	1

2PC BARREL TYPE SPRING CHECK VALVE

- Working Pressure: 300PSI (PN20)
- Working Temperature: -10 -120°C
- Opening Pressure: 2PSI
- Suitable Medium: W.O.G.
- Threaded end: NPT
- Made in China

PART#	SIZE	L	D	LBS/PC	CASE	LIST PRICE
949441	1/4"	2.00	1.142	.27	100	---
949442	3/8"	2.00	1.142	.24	100	---
949443	1/2"	2.24	1.28	.36	100	---
949444	3/4"	2.44	1.594	.54	60	---
949445	1"	2.95	1.89	.88	30	---
949446	1-1/4"	3.23	2.362	1.39	18	---
949447	1-1/2"	3.46	2.756	1.81	25	---
949448	2"	3.94	3.425	2.86	14	---

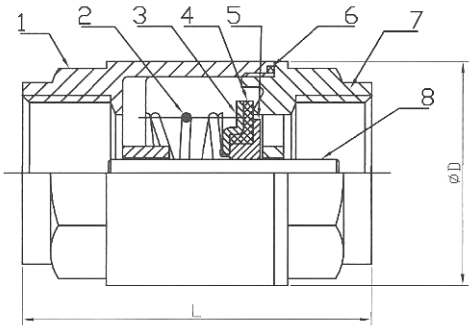

NO	PART	MATERIAL	QTY
1	BODY	CF8M/ CF8	1
2	BOLT	304	1
3	SEAT	NBR	1
4	DISC	304	1
5	SPRING	316/ 304	1
6	GASKET	PTFE	1
7	CAP	CF8M/ CF8	1

WARNING: This product can expose you to chemicals, including lead, which are known to the State of California to cause cancer and birth defects or other reproductive harm. For more information, visit www.P65Warnings.ca.gov

316 SS MISCELLANEOUS VALVES

PLUMBING

#316 SS Y STRAINER

- Investment Castings for Body
- Pressure Rating: 800PSI (PN40)
- Threaded Ends: ANSI B2.1
- Material: CF8M (#316 SS)
- Pressure Test: API 598
- Made in China

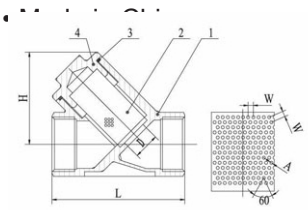

- 40 Mesh screen

	PART	MATERIAL	QTY
1	BODY	CF8M	1
2	SCREEN	SS316	1
3	JOINT GASKET	PTFE	1
4	BONNET	CF8M	1

PART #	SIZE	D	L	H	W	ØA	LBS	LIST PRICE
949521	1/4"	.38"	2.53	51	1.69	1	0.44	---
949522	3/8"	.48"	2.53	51	1.69	1	0.38	---
949523	1/2"	.59"	2.53	51	1.76	1	0.46	---
949524	3/4"	.79"	3.12	60	2.07	1	0.69	---
949525	1"	.98"	3.57	72	2.67	1	1.27	---
949526	1-1/4"	1.26"	4.17	77	2.9	1	1.74	---
949527	1-1/2"	1.57"	4.71	87	3.23	1	2.38	---
949528	2"	1.96"	5.49	102	3.88	1	3.57	---

316 SS SWING CHECK VALVE

- 200PSI(PN16)
- Threaded Ends: ANSI B2.1
- Material: CF8M (#316 SS)
- Pressure Test: API 598
- Made in China

	PART	MATERIAL	QTY
1	Body	Cf8m	1
2	Disc	Cf8m	1
3	Pipe Plug	Cf8	1
4	Screw	Cf8	1
5	Screw Gasket	Ptfe	1
6	Cap	Cf8m	1
7	Cap Gasket	Ptfe	1

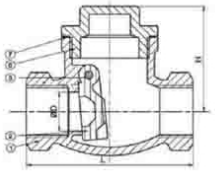

PART #	SIZE	D	L	W	LBS	LIST PRICE
949353	1/2"	.59"	2.45	1.66	0.53	---
949354	3/4"	.79"	2.92	1.82	0.73	---
949355	1"	.98"	3.41	2.06	1.2	---
949356	1-1/4"	1.26"	3.93	2.32	1.79	---
949357	1-1/2"	1.57"	4.54	2.54	2.18	---
949358	2"	1.96"	5.3	2.78	3.03	---

CF8 = 304SS
CF8M = 316SS

316 SS GLOBE VALVES

- 200PSI(PN16)
- Threaded Ends: ANSI B2.1
- Material: CF8M (#316 SS)
- Pressure Test: API 598
- Made in China

	PART	MATERI-AL	QTY
1	Body	Cf8m	1
2	Disc	Cf8m	1
3	Stem	304ss	1
4	Cap	Cf8m	1
5	Seal	Ptfe	1
6	Gasket	304ss	1
7	Packing	Ptfe	1
8	Gasket	Cf8	1
9	Gland	304ss	1
10	Nut	304ss	1
11	Spring Washer	Cf8	1
12	Handle Wheel	Steel	1

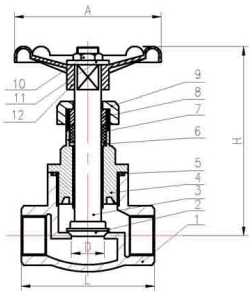

PART #	SIZE	L	LBS	LIST PRICE
949303	1/2	2.64	0.89	---
949304	3/4	3.19	1.3	---
949305	1	3.46	1.72	---
949306	1-1/4	3.81	2.33	---
949307	1-1/2	4.25	3.11	---
949308	2	5.1	4.38	---

316 SS GATE VALVES

- 200PSI(PN16)
- Threaded Ends: ANSI B2.1
- Material: CF8M (#316 SS)
- Pressure Test: API 598
- Made in China

	PART	MATERIAL	QTY
1	Body	Cf8m	1
2	Disc	Cf8m	1
3	Seal	Cf8m	1
4	Cap	Cf8m	1
5	Seal	Ptfe	1
6	Stem	304ss	1
7	Seal	Ptfe	1
8	Gland	304ss	1
9	Nut	304ss	1
10	Handle Wheel	Steel	1
11	Gasket	Ptfe	1
12	Cap Nut	Cf8	1

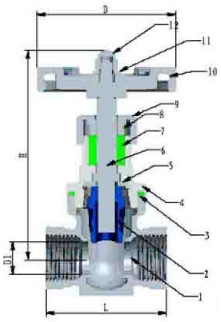

PART #	SIZE	L	D	D1	H	LBS	LIST PRICE
949253	1/2	2.07	2.54	0.55	3.37	0.78	---
949254	3/4	2.28	2.89	0.74	4.03	0.99	---
949255	1	2.42	2.89	0.95	4.46	1.25	---
949256	1-1/4	2.79	3.06	1.18	4.86	1.76	---
949257	1-1/2	2.92	3.79	1.49	5.53	2.59	---
949258	2	3.3	4.17	1.85	6.12	3.54	---

WARNING: This product can expose you to chemicals, including lead, which are known to the State of California to cause cancer and birth defects or other reproductive harm. For more information, visit www.P65Warnings.ca.gov

DUCTILE IRON VALVES AND ACCESSORIES

WAFER STYLE - LEVER OPERATED

NICKLE PLATED DUCTILE IRON DISC & SS DISC

WAFER STYLE GEAR OPERATED

NICKLE PLATED DUCTILE IRON DISC & SS DISC

BUTTERFLY ACCESSORIES

WAFER STYLE DOUBLE DOOR CHECK VALVE

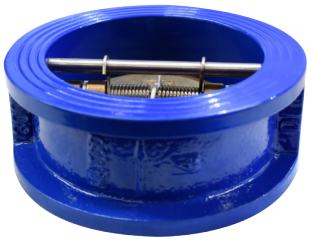

AWWA C508 OUTSIDE LEVER

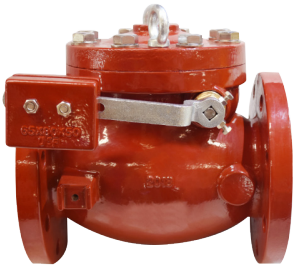

AND WEIGHT CHECK VALVES

UL/FM FLANGED SWING CHECK VALVE

SWING CHECK FLANGED

AWWA C515-15 GATE VALVES

FLANGED OS & Y RESILIENT WEDGE GATE VALVE

NRS RESILENT WEDGE GATE VALVES, FLANGED, MECHANICAL JOINT & FLANGE BY MECHANICAL JOINT

WARNING: This product can expose you to chemicals, including lead, which are known to the State of California to cause cancer and birth defects or other reproductive harm. For more information, visit www.P65Warnings.ca.gov

BUTTERFLY VALVES - WAFER

PLUMBING

LEVER - WAFER

Small in size and light in weight, easy to install. It can be mounted wherever needed, quick 90° on-off operation. Disc has two-way bearing, perfect seal without leakage under the pressure test. Flow curve tending to straight-line. Strong wash and brush resistence and can fit to bad working condition. Center plate structure, small torque of open and close. Disc & stem are fastened by pin, more stable.

Standard:
1.Design Code :Ap1609 Class A
2.Face To Face : Ap1609
3.End Standard:ansl B16.5 125lb/150lb
4.Lnspectlon & Test:apl 598

TOP FLANGE DLMENSLONS	
SIZE	4-Φd2
1.5"-3"	4-0.276
4"-6"	4-0.39
8"-14"	4-0.47

PART#	DUCTILE IRON DISC/ BUNA SEAT/ LEVER	CASE	WEIGHT	
9650L2	2"	200	7.3	---
9650L2.5	2-1/2"	190	8.4	---
9650L3	3"	180	9.8	---
9650L4	4"	150	12.1	---
9650L5	5"	110	16.5	---
9650L6	6"	90	16.9	---
9650L8	8"	50	30.3	---
9650L10	10"	35	44.5	---
9650L12	12"	24	51.6	---

SS DISC/ EPDM SEAT/ LEVER

PART#	SIZE	
9650L2SE	2"	---
9650L3SE	3"	---
9650L4SE	4"	---
9650L5SE	5"	---
9650L6SE	6"	---
9650L8SE	8"	---
9650L10SE	10"	---
9650L12SE	12"	---

GEAR - WAFER

Standard:
1.Design Code :Ap1609 Class A
2.Face To Face : Ap1609
3.End Standard:ansl B16.5 125lb/150lb
4.Lnspectlon & Test:apl 598

TOP FLANGE DIMENSIONS				
SIZE	ISO5211	ΦK	ΦE	4-ΦD2
1.5"-3"	F05	2.56	1.97	4-0.276
4"-6"	F07	3.54	2.76	4-0.39
8"-14"	F10	4.92	4.02	4-0.47

PART#	WAFER/ DUCTILE IRON DISC/ BUNA SEAT/ GEAR	CASE	WEIGHT	
9650G2	2"	200	7.3	---
9650G2.5	2-1/2"	190	8.4	---
9650G3	3"	180	9.8	---
9650G4	4"	150	12.1	---
9650G6	6"	90	16.9	
9650G8	8"	50	30.3	---
9650G10	10"	35	44.5	---
9650G12	12"	24	51.6	---

WAFER/ SS DISC/ EPDM SEAT/ GEAR

PART#	SIZE	
9650G2SE	2"	---
9650G2.5SE	2-1/2"	---
9650G3SE	3"	---
9650G4SE	4"	---
9650G6SE	6"	---
9650G8SE	8"	---
9650G10SE	10"	---
9650G12SE	12"	---

WARNING: This product can expose you to chemicals, including lead, which are known to the State of California to cause cancer and birth defects or other reproductive harm. For more information, visit www.P65Warnings.ca.gov

LEVER - LUG

Small in size and light in weight, easy to install, can be mounted wherever needed. Lug type butterfly valve can be used at the end of the pipeline. Lug type butterfly valve has threaded metal inserts installed in the valve's bolt holes. Inserts are threaded on both ends, which allows this lug style valve to be installed into a system using two sets of bolts and no nuts for each hole. Valve is installed between two flanges using a separate set of bolts for each side of the flange. This setup permits either side of the piping system to be disconnected without disturbing the other side.

PART#	DUCTILE IRON DISC/ BUNA SEAT/ LEVER	CASE	WEIGHT	
9660L2	2"	200	7.3	---
9660L2.5	2-1/2"	190	8.4	---
9660L3	3"	180	9.8	---
9660L4	4"	150	12.1	---
9660L5	5"	110	16.5	---
9660L6	6"	90	16.9	---
9660L8	8"	50	30.3	---
9660L10	10"	35	44.5	---
9660L12	12"	24	51.6	---

SS DISC/ EPDM SEAT/ LEVER

PART#	SIZE	
9660L2SE	2"	---
9660L3SE	3"	---
9660L4SE	4"	---
9660L5SE	5"	---
9660L6SE	6"	---
9660L8SE	8"	---
9660L10SE	10"	---
9660L12SE	12"	---

GEAR - LUG

PART#	DUCTILE IRON DISC/ BUNA SEAT/ GEAR	CASE	WEIGHT	
9660G2	2"	200	7.3	---
9660G2.5	2-1/2"	190	8.4	---
9660G3	3"	180	9.8	---
9660G4	4"	150	12.1	---
9660G6	6"	90	16.9	---
9660G8	8"	50	30.3	---
9660G10	10"	35	44.5	---
9660G12	12"	24	51.6	---

SS DISC/ EPDM SEAT/ GEAR

PART#	SIZE	
9660G2SE	2"	---
9660G2.5SE	2-1/2"	---
9660G3SE	3"	---
9660G4SE	4"	---
9660G6SE	6"	---
9660G8SE	8"	---
9660G10SE	10"	---
9660G12SE	12"	---

WARNING: This product can expose you to chemicals, including lead, which are known to the State of California to cause cancer and birth defects or other reproductive harm. For more information, visit www.P65Warnings.ca.gov

BUTTERFLY ACCESSORIES
PLUMBING

STEM EXTENSIONS

- FOR BOLTS AND NUTS
- BLACK COLOR

PART#	FOR VALVE SIZES ""	LENGTH	
9650EX2324	2-3	24 LONG	---
9650EX2336	2-3	36 LONG	---
9650EX2348	2-3	48 LONG	---
9650EX2360	2-3	60 LONG	---
9650EX2372	2-3	72 LONG	---
9650EX4624	4-6	24 LONG	---
9650EX4636	4-6	36 LONG	---
9650EX4648	4-6	48 LONG	---
9650EX4660	4-6	60 LONG	---
9650EX4672	4-6	72 LONG	---
9650EX1224	8-12	24 LONG	---
9650EX1236	8-12	36 LONG	---
9650EX1248	8-12	48 LONG	---
9650EX1260	8-12	60 LONG	---
9650EX1272	8-12	72 LONG	---

LEVER REPLACEMENT

PART#	REPLACEMENT LEVER HANDLE FOR	
9650L23	2-3 9650BFV	---
9650L46	4-6 9650 BFV	---
9650L812	8-10 9650 B	---
9650L120	12 9650 BFV	---

GEAR WHEEL HANDLE

PART#	REPLACEMENT WHEEL HANDLE FOR	
9650WH23	2-3" 9650 BFV	---
9650WH46	4-6" 9650 BFV	---
9650WH812	8-12" BFV	---

ROLL PIN

PART#	REPLACEMENT ROLL PIN FOR	
9650RP23	2-3 9650 BFV	---
9650RP46	4-6 9650 BFV	---
9650RP12	8-12 9650 BFV	----

INDEX PLATE

PART#	REPLACEMENT INDEX PLATE	
9650IP23	2-3" 9650BFV	---
9650IP46	4-6" 9650BFV	---
9650IP812	8-12" 9650 B	---

GEAR REPLACEMENT

PART#	REPLACEMENT GEAR OPERATOR	
9650G23	2-3 9650 BFV	---
9650G46	4-6 9650 BFV	---
9650G812	8-10 9650BFV	---
9650G120	12 - 9650BFV	---

WARNING: This product can expose you to chemicals, including lead, which are known to the State of California to cause cancer and birth defects or other reproductive harm. For more information, visit www.P65Warnings.ca.gov

DOUBLE DOOR WAFER CHECK VALVE

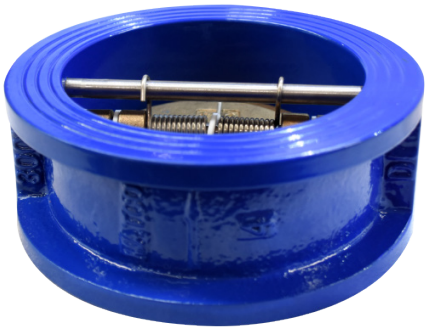

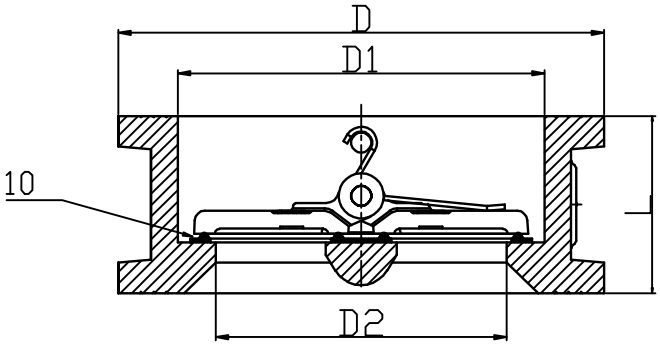

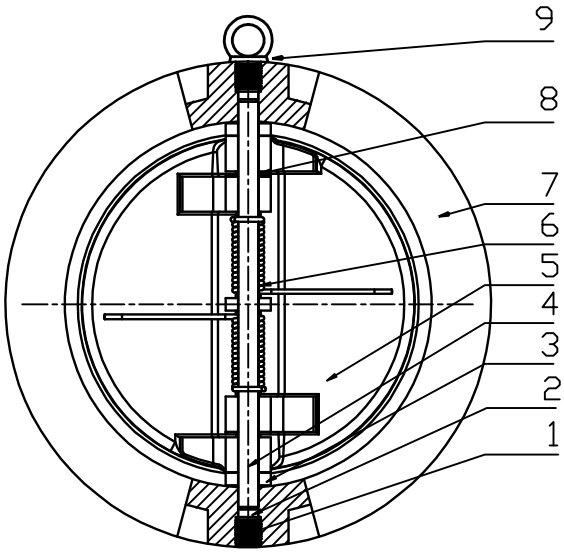

PART	PART	MATERIAL
1	Countersunk Hex Head Screws	Carbon Steel ASTM A325
2	Stal Ring	EPDM
3	Gasket	PTFE
4	Shaft	Stainless Steal SS420
5	Disc	Aluminum Brance C954
6	Spring	Stainless Steal SS304
7	Body	Ductile Lron ASTM 65-45-12
8	Gasket	PTFE
9	Rings	Carbon steel ASTM A325
10	Seat	EPDM

MAIN DIMENSIONS					
DN		DIMENSIONS (MM)			
inch	mm	L	D	D1	D2
2	50	54	102	64	46
21/2'	65	54	121	78	60
3	80	57	134	94	70
4	100	64	162	117	84
5	125	70	192	145	115
6	150	76	218	170	134
8	200	95	273	224	184
10	250	108	335	265	220
12	300	143	407	310	260
14	350	184	442	360	302
16	400	191	511	410	350

PART#	SIZE	CASE	WEIGHT	
963002	2	50	4	---
963025	2-1/2	40	5	---
963003	3	20	8	---
963004	4	20	13	---
963005	5	20	16	---
963006	6	10	20	---
963008	8	10	38	---
963010	10	10	38	---
963012	12	5	92	---
963014	14	4	121	---
963016	16	4	165	---

WARNING: This product can expose you to chemicals, including lead, which are known to the State of California to cause cancer and birth defects or other reproductive harm. For more information, visit www.P65Warnings.ca.gov

UL WAFER CHECK VALVES
PLUMBING

DOUBLE DOOR UL/FM WAFER CHECK VALVES

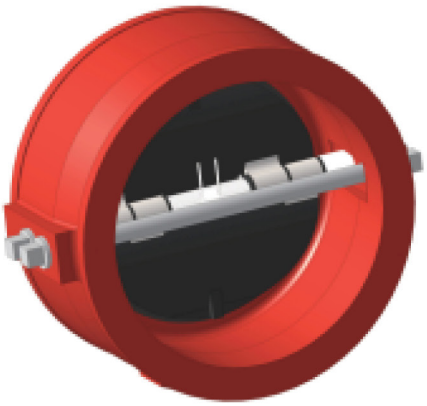

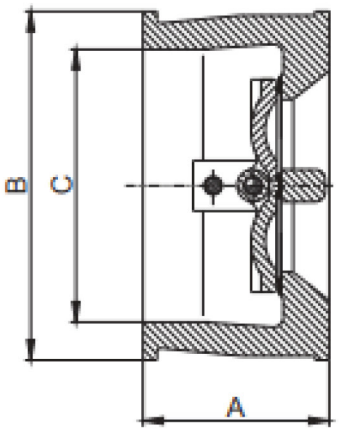

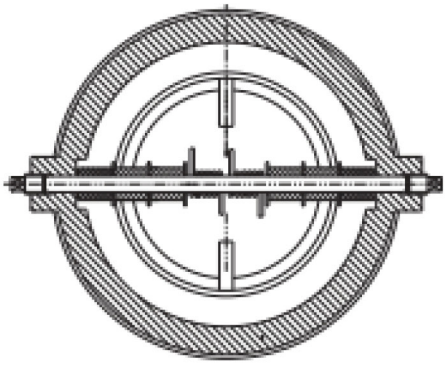

Specifications

- Meet or exceed the requirements of UL312 and API 584 standard.
- Spring loaded for fast closure.
- Vertical or Horizontal installation.
- Resilient-seated for perfect tightness even at low differential pressure.
- Excellent flow characteristics and low pressure losses at high flow rates.
- Connection ends comply with ASME B16.1 Class 125 and ASME B16.5 Class 150 Flanges.
- UL 312/ULC listed.

Working Pressure and Temperature
300 psi @ 0 C° to 87° C

Corrosion Protection
Fusion Bonded Epoxy Coated Interior and Exterior to AWWA C550 Standard

PART #	963004UL	963006UL
SIZE	4	6
A	93mm/3.66in	105mm/4.13in
B	172mm/6.75in	220mm/8.66in
C	136mm/5.35in	178/mm7.00in

WARNING: This product can expose you to chemicals, including lead, which are known to the State of California to cause cancer and birth defects or other reproductive harm. For more information, visit www.P65Warnings.ca.gov

DUCTILE IRON CHECK VALVES

PLUMBING

CHECK VALVE W/OUTSIDE L/W

AWWA C508 CHECK VALVE W/OUTSIDE L/W

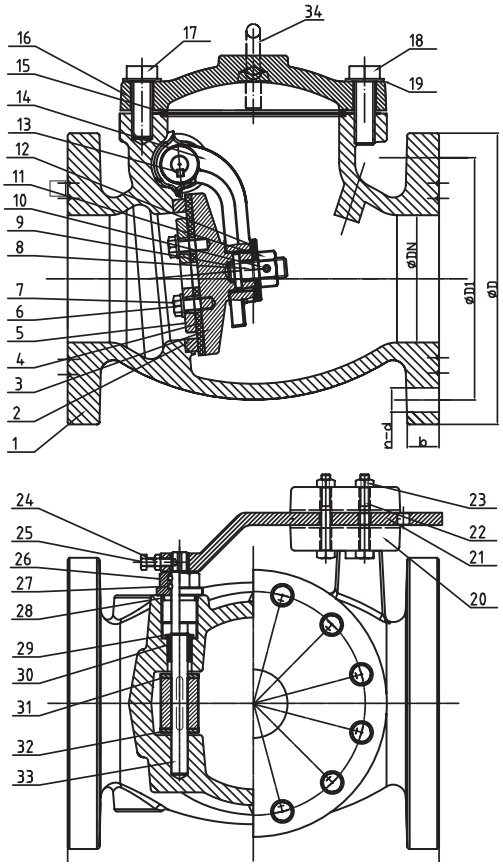

PART	PART	MATERIAL
1	Valve Body	Ductile iron 65-45-12
2	Seat	ASTM B62 C83600
3	Disc	Ductile iron 65-45-12
4	Disc Seat Ring	NBR
5	Retainer Washer	Ductile iron 65-45-12
6	Washer	AISI 304
7	Bolt	AISI 304
8	Stud	ASTM B62 C83600
9	Roll Pin	AISI 304
10	Roll Pin	AISI 304
11	Nut	ASTM B62 C83600
12	Washer	ASTM B62 C83600
13	Flat Key	AISI 304
14	Clapper Arm	Ductile iron 65-45-12
15	O-Ring	NBR
16	Bonnet	Ductile iron 65-45-12
17	Bolt	AISI 316
18	Bolt	AISI 316
19	Washer	AISI 316
20	Weight	Ductite iron,65-45-12
21	Arm	Cast steel WCB
22	Bolt	AISI 316
23	Nut	AISI 316
24	Nut	AISI 316
25	Bolt	AISI 316
26	Seat Nut	ASTM B62 C83600
27	O-Ring	NBR
28	Gasket	PTFE
29	Circlip	Carbon steel
30	Shaft sleeve gland	ASTM B62 CB3600
31	Washer	ASTM B62 CB3600
32	Washer	ASTM B62 CB3600
33	Hinge Pin	AISI 420
34	Eye bolt	Carbon steel

MAIN DIMENSIONS (MM)							
INCH	DN	L	D	D1	B	N-D	H
3"	80	241	200	152.5	19	4-19.1	173
4"	100	292	229	190.5	24	8-19.1	175.5
6"	150	356	285	241.5	25.5	8-22.2	237.5
8"	200	495	343	298.5	28.5	8-22.2	272.5
10"	250	622	406	362	30.5	12-25.4	326
12"	300	698	483	432	32	12-25.4	358

PART#	SIZE	CASE	WEIGHT	
96203LW	3	16	57	---
96204LW	4	12	84	---
96206LW	6	6	156	---
96208LW	8	4	294	---
962010LW	10	2	466	---
962012LW	12	2	627	---

UL/FM FLANGED SWING CHECK VALVE

PART#	SIZE	CASE	WEIGHT	
96203UL	3	36	50	---
96204UL	4	36	77	---
96206UL	6	14	140	---
96208UL	8	4	266	---
962010UL	10	1	398	---
962012UL	12	1	533	---

WARNING: This product can expose you to chemicals, including lead, which are known to the State of California to cause cancer and birth defects or other reproductive harm. For more information, visit www.P65Warnings.ca.gov

DUCTILE IRON CHECK VALVES

PLUMBING

AWWA C508 & AWWA C515 SWING CHECK VALVE FLANGED

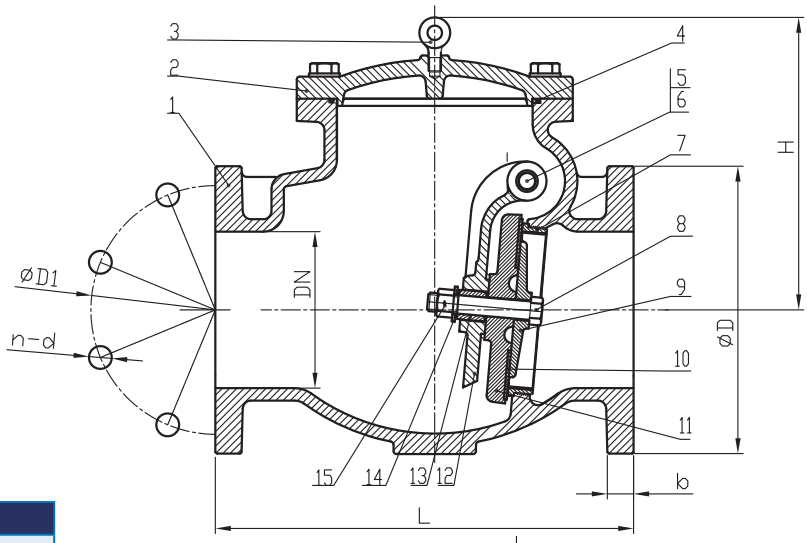

PART	PART	MATERIAL
1	Valve Body	Ductile Iron 65-45-12
2	Bonnet	Ductile Iron 65-45-12
3	Sling Ring	Carbon Steel Zinc Plated
4	O Ring	NBR
5	Hinge Pin	Stainless Steel 304
6	Hinge bushing	Brass ASTM B36
7	Seat Ring	Bronze ASTM B62
8	Disc Seat Bolts	Stainless Steel 304
9	Retainer Washer	Bronze ASTM B62
10	Disc Seat Ring	EPDM
11	Disc	Ductile Iron 65-45-12
12	Ctapper Arm	Ductile Iron 65-45-12
13	Stud Bushing	Bronze ASTM B36
14	O Ring	NBR
15	Nuts	Stainless Steel 304
16	Plug	Tin bronze

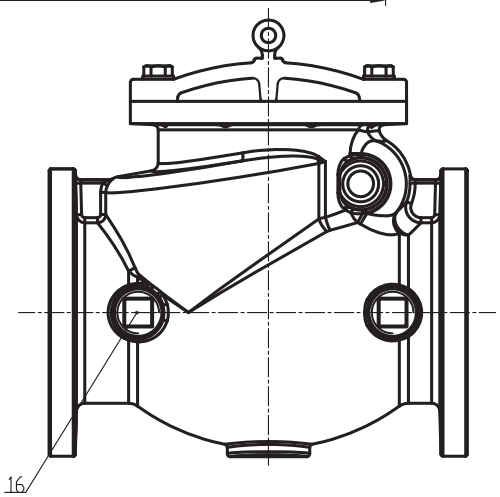

MAIN DIMENSIONS								
DN		PSI	DIMENSIONS (MM)					
INCH	MM		L	D	D1	B	N-D	H
3"	80	300	278	191	152.5	19	4-19.1	160
4"	100	300	330	229	190.5	24	8-19.1	218
6"	150	300	406	279	241.5	25.5	8-22.2	290
8"	200	300	495	343	298.5	28.5	8-22.2	330
10"	250	300	622	406	362	30.5	12-25.4	350
12"	300	300	660	483	432	32	12-25.4	376

PART#	SIZE	CASE	WEIGHT	
962003	3	16	57	---
962004	4	12	84	---
962006	6	6	156	---
962008	8	4	294	---
962010	10	2	466	---
962012	12	2	627	---

WARNING: This product can expose you to chemicals, including lead, which are known to the State of California to cause cancer and birth defects or other reproductive harm. For more information, visit www.P65Warnings.ca.gov

DUCTILE IRON GATE VALVES

PLUMBING

C515 OS&Y RESILIENT SEATED GATE VALVE
FLANGE ENDS, 300PSI

c UL us

FM APPROVED

CLASSIFIED UL WATER QUALITY
Drinking Water System Component
ANSI/ NSF 61 & 372
MH61025

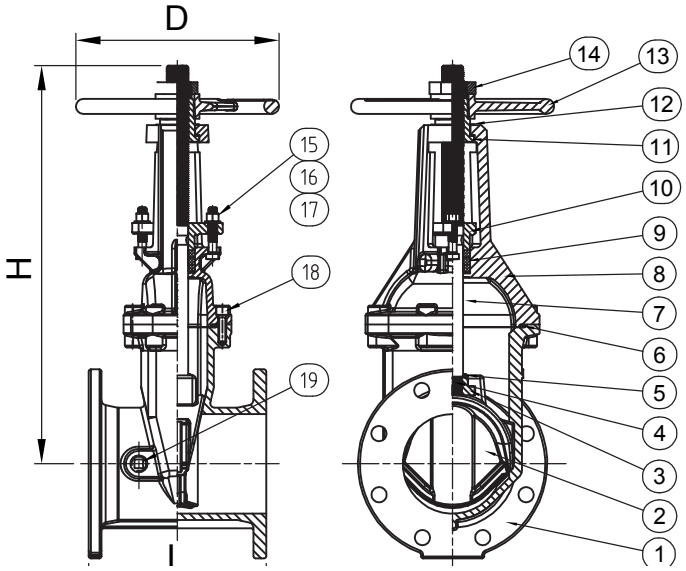

PART#	SIZE	CASE	WEIGHT	
9610F25	2-1/2"	25	46.2	---
9610F3	3"	16	62.7	---
9610F4	4"	16	74.8	---
9610F6	6"	9	103.9	---
9610F8	8"	6	190.9	---
9610F10	10"	2	291.8	---
9610F12	12"	2	409.8	---

ITEM	DESCRIPTION	MATERIAL	ASTM SPEC.
1	Body	Ductile Iron	A536 65-45-12
2	Wedge	Ductile Iron, EPDM Encapsulated	A536 65-45-12
3	Wedge Nut	Stainless Steel	A276 Type 304SS
4	Pin	Stainless Steel	A276 Type 420SS
5	O-Ring	Rubber	D2000 NBR
6	Gasket	Rubber	D2000 NBR
7	Stem	Stainless Steel	A276 Type 304SS
8	Bonnet	Ductile Iron	A536 65-45-12
9	Packing	Graphite	
10	Gland	Ductile Iron	A536 65-45-12
11	Yoke Nut	Bronze	B148 C95200
12	Washer	Brass	
13	Handwheel	Ductile Iron	A536 65-45-12
14	Handwheel Nut	Ductile Iron	A536 65-45-12
15	Bolts	Stainless Steel	A276 Type 304SS
16	Nuts	Stainless Steel	A276 Type 316SS
17	Washers	Stainless Steel	A276 Type 304SS
18	Bonnet Bolts	Carbon Steel Zinc Plated	A307 Grade B
19	Plug	Malleable Iron	

NO TAP

PART#	SIZE	CASE	WEIGHT	
9610NYCF25	2-1/2"	25	46.2	---
9610NYCF3	3"	32	62.7	---
9610NYCF4	4"	64	74.8	---
9610NYCF6	6"	54	103.9	---
9610NYCF8	8"	36	190.9	---
9610NYCF10	10"	12	291.8	---
9610NYCF12	12"	12	409.8	---

MAIN DIMENSIONS							
SIZE	2.5"	3"	4"	6"	8"	10"	12"
L	7-1/2"	8"	9"	10-1/2"	11-1/2"	13"	14"
H (Open)	16-5/8"	18-7/8"	21-5/8"	29-1/8"	36-5/8"	44-1/2"	52"
H (Close)	13-3/4"	15-3/4"	17-3/4"	23-1/4"	28-3/4"	34-3/4"	40-1/6"
D	7-1/4"	10"	10"	12"	14"	17-1/2"	17-1/2"

COMPLIES WITH NEW YORK AND CHICAGO REQUIREMENTS.

WARNING: This product can expose you to chemicals, including lead, which are known to the State of California to cause cancer and birth defects or other reproductive harm. For more information, visit www.P65Warnings.ca.gov

DUCTILE IRON GATE VALVES

PLUMBING

NRS RESILIENT SEATED GATE VALVE
FLANGE ENDS, 300PSI

c UL US

FM APPROVED

CLASSIFIED UL WATER QUALITY
Drinking Water System Component
ANSI/ NSF 61 & 372
MH61025

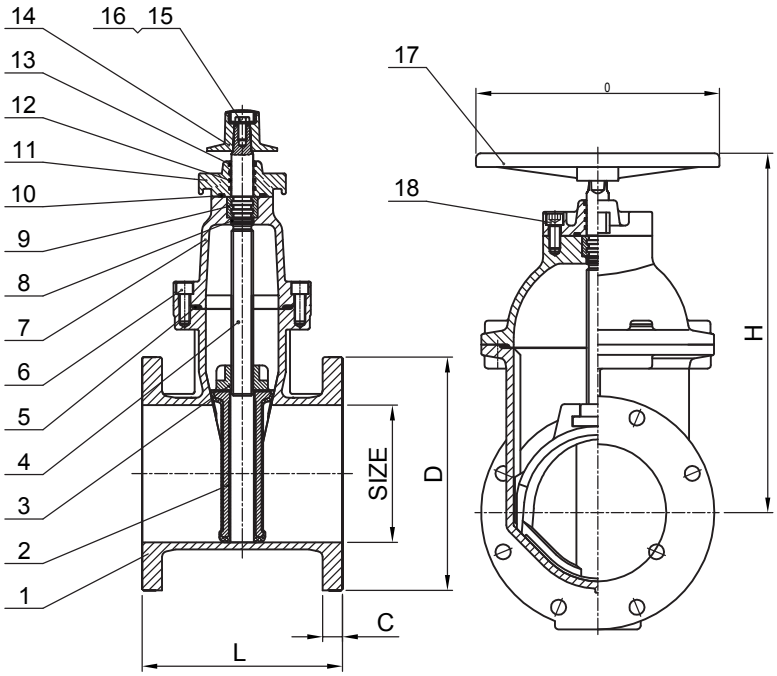

PART#	SIZE	CASE	WEIGHT	
9600FL25	2-1/2"	25	37.6	---
9600FL3	3"	16	54.2	---
9600FL4	4"	16	65.5	---
9600FL6	6"	9	107.5	---
9600FL8	8"	6	181.9	---
9600FL10	10"	2	297.4	---
9600FL12	12"	2	431.4	---

ITEM	DESCRIPT.	MATERIAL	ASTM SPEC.
1	Body	Ductile Iron	A536 65-45-12
2	Wedge	Ductile Iron, EPDM Encapsulated	A536 65-45-12
3	Wedge Nut	Bronze	B148 C95200
4	Stem	Stainless Steel	A276 Type 304SS
5	Gasket	Rubber	D2000 NBR
6	Bolts	Stainless Steel	A276 Type 304SS
7	Bonnet	Ductile Iron	A536 65-45-12
8	O-Ring	Rubber	D2000 NBR
9	Thrust Collar	Bronze	B148 C95200
10	O-Ring	Rubber	D2000 NBR
11	Gland	Ductile Iron	A536 65-45-12
12	O-Ring	Rubber	D2000 NBR
13	Dust Ring	Rubber	D2000 NBR
14	Operating Nut (Optional)	Ductile Iron	A536 65-45-12
15	Bolts	Stainless Steel	A276 Type 304SS
16	Washers	Stainless Steel	A276 Type 304SS
17	Handwheel (Optional)	Ductile Iron	A536 65-45-12
18	Bolts	Stainless Steel	A276 Type 304SS

MAIN DIMENSIONS							
SIZE	2.5"	3"	4"	6"	8"	10"	12"
L	7-1/2"	8.0"	9.0"	10-1/2"	11-1/2"	13.0"	14.0"
H	10.0"	11.0"	11.8"	16.4"	20.7"	24.5"	28.0"
D	7.0"	10.0"	10.0"	12.0"	14.0"	16.0"	16.0"

WARNING: This product can expose you to chemicals, including lead, which are known to the State of California to cause cancer and birth defects or other reproductive harm. For more information, visit www.P65Warnings.ca.gov

DUCTILE IRON GATE VALVES

PLUMBING

AWWA C515-15 NRS RESILIENT SEATED GATE VALVE
MJ × MJ ENDS, 300PSI

c UL US

FM APPROVED

CLASSIFIED UL WATER QUALITY
Drinking Water System Component
ANSI/ NSF 61 & 372
MH61025

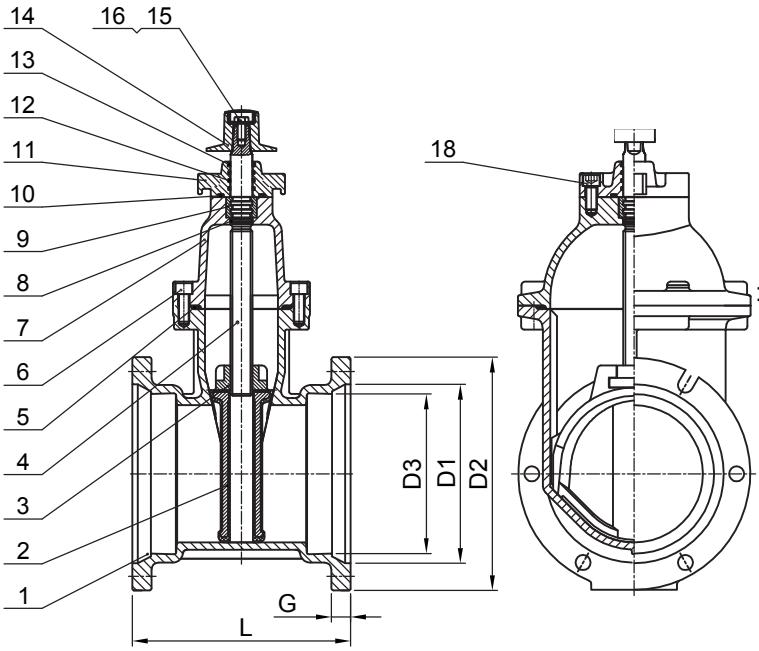

PART#	SIZE	WEIGHT	CASE	
9600MJ3	3"	54.2	16	---
9600MJ4	4"	65.5	16	---
9600MJ6	6"	107.5	9	---
9600MJ8	8"	181.9	6	---
9600MJ10	10"	297.4	2	---
9600MJ12	12"	431.4	2	---

*Standard config is op nut only
*MJ=Mechanical Joint

ITEM	DESCRIP.	MATERIAL	ASTM SPEC.
1	Body	Ductile Iron	A536 65-45-12
2	Wedge	Ductile Iron, EPDM Encapsulated	A536 65-45-12
3	Wedge Nut	Bronze	B148 C95200
4	Stem	Stainless Steel	A276 Type 304SS
5	Gasket	Rubber	D2000 NBR
6	Bolts	Stainless Steel	A276 Type 304SS
7	Bonnet	Ductile Iron	A536 65-45-12
8	O-Ring	Rubber	D2000 NBR
9	Thrust Collar	Bronze	B148 C95200
10	O-Ring	Rubber	D2000 NBR
11	Gland	Ductile Iron	A536 65-45-12
12	O-Ring	Rubber	D2000 NBR
13	Dust Ring	Rubber	D2000 NBR
14	Operating Nut (Optional)	Ductile Iron	A536 65-45-12
15	Bolts	Stainless Steel	A276 Type 304SS
16	Washers	Stainless Steel	A276 Type 304SS
17	Handwheel (Optional)	Ductile Iron	A536 65-45-12
18	Bolts	Stainless Steel	A276 Type 304SS

MAIN DIMENSIONS						
SIZE	3"	4"	6"	8"	10"	12"
L	11.5"	12.5"	14.8"	15.0"	13.0"	14.0"
H	16.4"	20.7"	24.5"	28.0"	24.5"	28.0"
D	12.0"	14.0"	16.0"	16.0"	16.0"	16.0"

WARNING: This product can expose you to chemicals, including lead, which are known to the State of California to cause cancer and birth defects or other reproductive harm. For more information, visit www.P65Warnings.ca.gov

DUCTILE IRON GATE VALVES

PLUMBING

NRS RESILIENT SEATED GATE VALVE
FL × MJ ENDS, 300PSI

c UL US

FM APPROVED

CLASSIFIED UL WATER QUALITY
Drinking Water System Component
ANSI/ NSF 61 & 372
MH61025

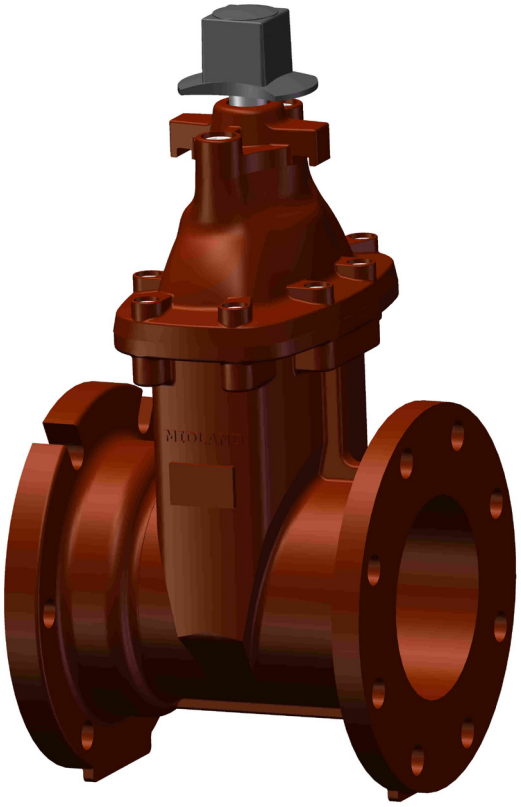

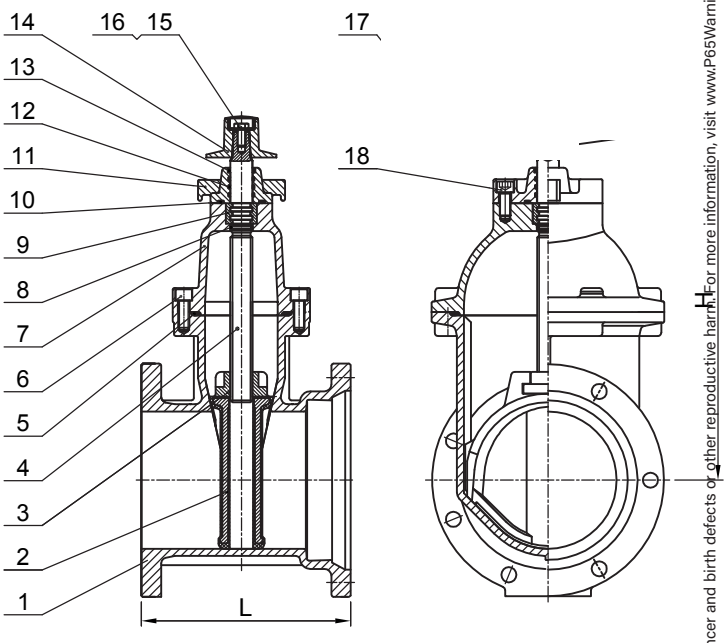

PART#	SIZE	WEIGHT	CASE	
9600FJ3	3"	54.3	16	---
9600FJ4	4"	65.5	16	---
9600FJ6	6"	107.5	9	---
9600FJ8	8"	181.9	6	---
9600FJ10	10"	297.4	2	---
9600FJ12	12"	431.4	2	---

*STANDARD CONFIG IS OP NUT ONLY
*MJ=MECHANICAL JOINT

ITEM	DESCRIPTION	MATERIAL	ASTM SPEC.
1	Body	Ductile Iron	A536 65-45-12
2	Wedge	Ductile Iron, EPDM Encapsulated	A536 65-45-12
3	Wedge Nut	Bronze	B148 C95200
4	Stem	Stainless Steel	A276 Type 304SS
5	Gasket	Rubber	D2000 NBR
6	Bolts	Stainless Steel	A276 Type 304SS
7	Bonnet	Ductile Iron	A536 65-45-12
8	O-Ring	Rubber	D2000 NBR
9	Thrust Collar	Bronze	B148 C95200
10	O-Ring	Rubber	D2000 NBR
11	Gland	Ductile Iron	A536 65-45-12
12	O-Ring	Rubber	D2000 NBR
13	Dust Ring	Rubber	D2000 NBR
14	Operating Nut (Optional)	Ductile Iron	A536 65-45-12
15	Bolts	Stainless Steel	A276 Type 304SS
16	Washers	Stainless Steel	A276 Type 304SS
17	Handwheel (Optional)	Ductile Iron	A536 65-45-12
18	Bolts	Stainless Steel	A276 Type 304SS

MAIN DIMENSIONS								
SIZE	3"	4"	6"	8"	10"	12"	10"	12"
L	8.8"	9.5"	11.0"	12.0"	14.0"	14.5"	13"	14"
H	11.0"	11.8"	16.4"	20.7"	24.5"	28.0"	44-1/2"	52"
D	10.0"	10.0"	12.0"	14.0"	16.0"	16.0"	34-3/4"	40-1/6"

WARNING: This product can expose you to chemicals, including lead, which are known to the State of California to cause cancer and birth defects or other reproductive harm. For more information, visit www.P65Warnings.ca.gov

DI THREADED Y STRAINER

MIDLAND	DESCRIPTION
9642TH03	DI Threaded Y Strainer, 1/2"/DN15
9642TH04	DI Threaded Y Strainer, 3/4"/DN20
9642TH05	DI Threaded Y Strainer, 1"/DN25
9642TH06	DI Threaded Y Strainer, 1 1/4"/DN32
9642TH07	DI Threaded Y Strainer, 1 1/2"/DN40
9642TH08	DI Threaded Y Strainer, 2"/DN50
9642TH09	DI Threaded Y Strainer, 2 1/2"/DN50
9642TH10	DI Threaded Y Strainer, 3"/DN80

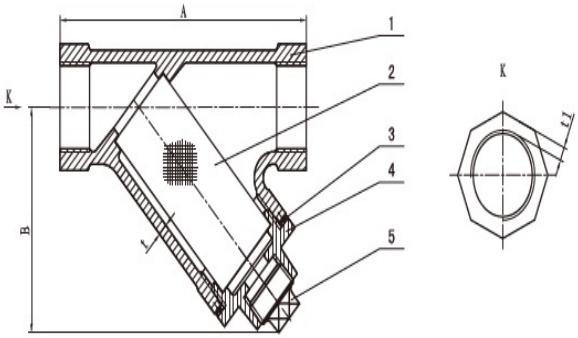

SIZE		DIMENSIONS(MM)				
inch	mm	A	B(max)	Plug	t	t1
1/4"	8	81	55	1/4"	2.4	2.4
3/8"	10	81	57	1/4"	2.5	2.5
1/2"	15	81	70	3/8"	2.54	2.54
3/4"	20	95	72	3/8"	3	3
1"	25	102	78	1/2"	4.06	4.06
1 1/4"	32	127	92	1/2"	4.83	4.83
1 1/2"	40	146	118	1/2"	4.83	4.83
2"	50	177	120	1/2"	5.59	5.59
2 1/2"	65	234	136	3/4"	5.59	5.59

DI FLANGED WYE STRAINER

MIDLAND	DESCRIPTION
9642FL4	DI FLGD Y Strainer, Graphite Gasket, 4"/DN100
9642FL6	DI FLGD Y Strainer, Graphite Gasket, 6"/DN150
9642FL8	DI FLGD Y Strainer, Graphite Gasket, 8"/DN200
9642FL10	DI FLGD Y Strainer, Graphite Gasket, 10"/DN250
9642FL12	DI FLGD Y Strainer, Graphite Gasket, 12"/DN300
9642FL2	DI FLGD Y Strainer, Graphite Gasket, 2"/DN50
9642FL25	DI FLGD Y Strainer, Graphite Gasket, 2 1/2"/DN65
9642FL3	DI FLGD Y Strainer, Graphite Gasket, 3"/DN80

SIZE		DIMENSIONS(MM)					
inch	mm	L	D	D1	b	n-ϕd	H
2	50	200	152	120.5	16	4-ϕ19.1	155
2.5	65	254	178	139.5	17.5	4-ϕ19.1	165
3	80	257	191	152.5	19	4-ϕ19.1	180
4	100	308	229	190.5	24	8-ϕ19.1	229
5	125	397	254	216	24	8-ϕ22.2	285
6	150	470	279	241.5	25.5	8-ϕ22.2	311
8	200	549	343	298.5	28.5	8-ϕ22.2	394
10	250	654	406	362	30.5	12-ϕ25.4	487
12	300	759	483	432	32	12-ϕ25.4	547

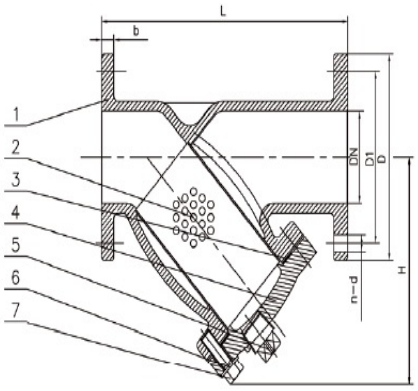

WARNING: This product can expose you to chemicals, including lead, which are known to the State of California to cause cancer and birth defects or other reproductive harm. For more information, visit www.P65Warnings.ca.gov

GATE VALVES
PLUMBING

IPS X IPS GATE VALVE

MIDLAND	DESCRIPTION
9640TH2	2 DI, IPS X IPS Gate Valve, NRS with EPDM Wedge
9640TH25	2 1/2 DI, IPS X IPS Gate Valve, NRS with EPDM Wedge
9640TH3	3 DI, IPS X IPS Gate Valve, NRS with EPDM Wedge
9640TH4	4 DI, IPS X IPS Gate Valve, NRS with EPDM Wedge
9640TH6	6 DI, IPS X IPS Gate Valve, NRS with EPDM Wedge

SIZE		DIMENSIONS(MM)	
inch	mm	L	H
2″	50	127	210
2.5″	65	140	232
3″	80	150	281
4″	100	190	316
5″	125	210	367

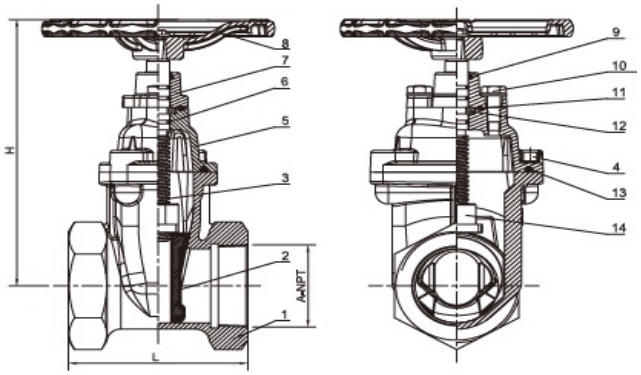

RT X RT GATE VALVE (PUSH-ON)

MIDLAND	DESCRIPTION
9640RT2	2 DI, RT X RT Gate Valve, NRS W/ OP Nut
9640RT25	2 1/2 DI, RT X RT Gate Valve, NRS W/ OP Nut
9640RT3	3 DI, RT X RT Gate Valve, NRS W/ OP Nut
9640RT4	4 DI, RT X RT Gate Valve, NRS W/ OP Nut
9640RT6	6 DI, RT X RT Gate Valve, NRS W/ OP Nut
9640RT8	8 DI, RT X RT Gate Valve, NRS W/ OP Nut

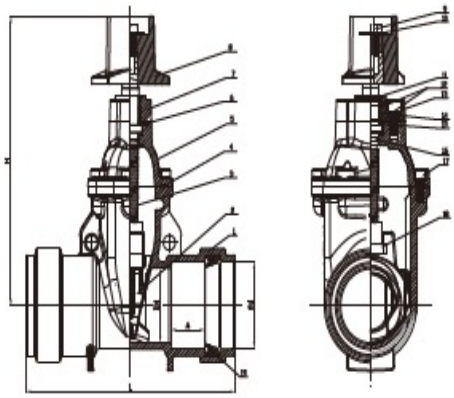

SIZE		PIPE O.D.	DIMENSIONS(MM)			
inch	mm	Average O.D. In.(mm)	L	H	A	d
2″	50	2.375(50.32)	260	278	50	62
2.5″	65	2.575(73.02)	273	300	53	75
3″	80	3.500(88.90)	305	321	57	90.5
4″	100	4.500(114.30)	350	375	57	117.5
6″	150	5.525(168.26)	428	455	95	172.5
8″	200	5.625(219.06)	470	565	110	222

WARNING: This product can expose you to chemicals, including lead, which are known to the State of California to cause cancer and birth defects or other reproductive harm. For more information, visit www.P65Warnings.ca.gov

FL X FL GATE VALVE

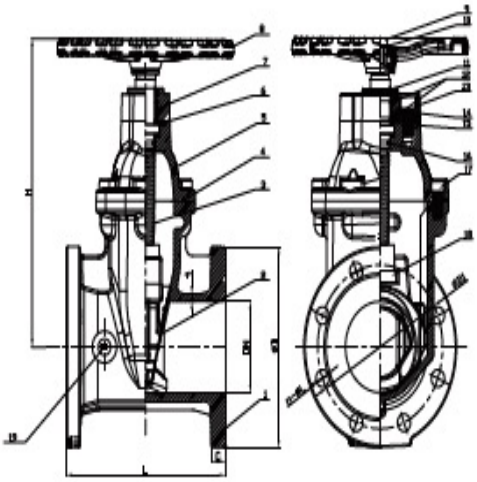

MIDLAND	DESCRIPTION
9640FL2	2 DI, FL X FL Gate Valve, NRS W/ OP Nut and H/W
9640FL25	2 1/2 DI, FL X FL Gate Valve, NRS W/ OP Nut and H/W
9640FL3	3 DI, FL X FL Gate Valve, NRS W/ OP Nut and H/W
9640FL4	4 DI, FL X FL Gate Valve, NRS W/ OP Nut and H/W
9640FL6	6 DI, FL X FL Gate Valve, NRS W/ OP Nut and H/W
9640FL8	8 DI, FL X FL Gate Valve, NRS W/ OP Nut and H/W

SIZE		DIMENSIONS(MM)					
inch	mm	L	H	D	D1	C	n-ϕL
2	50	176	254	152	120.7	15	4-ϕ19.1
2.5	65	190	275	178	139.7	17.5	4-ϕ19.1
3	80	203	301	191	152.4	19.1	4-ϕ19.1
4	100	229	355	229	190.5	19.1	8-ϕ19.1
5	125	254	393	254	215.9	19.1	8-ϕ22.2
6	150	267	448	279	241.3	19.1	8-ϕ22.2
8	200	292	548	343	290.5	22.2	8-ϕ22.2
10	250	330	626	405	362	23.5	12-ϕ25.4
12	300	356	722	463	431.5	25.4	12-ϕ25.4

WARNING: This product can expose you to chemicals, including lead, which are known to the State of California to cause cancer and birth defects or other reproductive harm. For more information, visit www.P65Warnings.ca.gov

VERTICAL POST INDICATORS

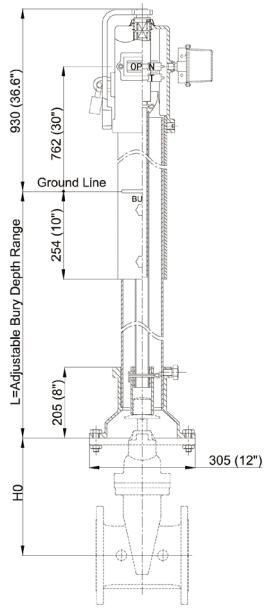

Specifications

Meet or Exceed the Requirements of NFPA 24 Standard.
Indicates the State of the Valve OPEN or SHUT Position.
Target Nut to allow 13 to 45 Turns.
"L" Shaped Wrench Handle fitting with a Secure Padlock (provided by user).
Protected Windows.
Telescoping Operating Rod.
Easily Adjustable Indicator OPEN and SHUT Targets.
UL/ULC 789 Listed and FM1110 Approved.
GOST Certification.

Corrosion Protection

Spray Painted Interior and Exterior to AWWA C550 Standard.
Stand Barrel: Black Bitumen Coated.

Options

Fusion Bonded Coating Interior and Exterior.
Tapped Supervisory Tamper Switch.
Stainless Steel Fasteners: A2-70 or A4-70.

PART #	SIZE	LIST
9600IPA412	Fits 4"-12"	

Material Specifications

PART	MATERIAL	ASTM SPECIFICATION
Post Head	Gray Cast Iron	A126 Class B
Operating Wrench	Ductile Iron	A536 Grade 65-45-12
Retaining Ring	Stainless Steel	A276 Type 304
Weather Cap	Polyethylene	Commercial
Threaded Sleeve	Stainless Steel	A276 Type 304
Pipe Plug	Malleable Iron	A47 Grade 22010
Target Plate	Aluminum Alloy	ASTM B26
Screw	Carbon Steel	A105
Target Plate	Aluminum Alloy	ASTM B26
Windows	Plexiglass	Commercial
Gasket	Rubber	D2000 NBR
Upper Barrel	Carbon Steel	A53 Type S Grade B
Lower Barrel	Carbon Steel	A53 Type S Grade B
Upper Rod	Carbon Steel	A53 Type S Grade B
Lower Rod	Carbon Steel	A53 Type S Grade B
Base Flange	Cast Iron	A126 Class B
Locking Bolts	Carbon Steel	A307 Grabe B
Locking Nuts	Carbon Steel	A 105
Cotter Pin	Stainless Steel	A276 Type 304

Dimension Data for Vertical Indicator Post (mm/inch)

SIZE	4	6	8	10	12	14
TURNS TO OPEN	13	20	26	33	39	45
H0	252/ 9.92	355/ 13.97	444/ 17.48	535/ 21.06	617/ 24.29	727/ 28.62

L = Adjustable Bury Depth Range

L	A	B
MIN	459/18.25	915/36
MAX	1003/39.5	1537/60.5

WARNING: This product can expose you to chemicals, including lead, which are known to the State of California to cause cancer and birth defects or other reproductive harm. For more information, visit www.P65Warnings.ca.gov

ASTMA105
ASME SA105
ANSI B16.5

CARBON STEEL FLANGES

• A105 Forged Steel • CLASS 150
(1-1/2 thru 6" available in #316 Stainless Steel add SS to part#)

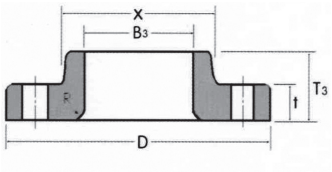

SLIP-ON 1/16" RAISED FACE CARBON STEEL FLANGE

PART #	SIZE	LIST PRICE
	1/2"	---
	3/4"	---
	1"	---
	1-1/4"	---
107024	1-1/2"	---
107025	2"	---
107026	2-1/2"	---
107027	3"	---
107029	4"	---
107031	6"	---
107032	8"	---
	10"	---
	12"	---

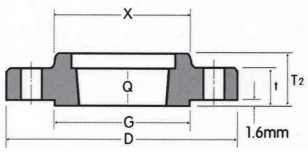

THREADED 1/16" RAISED FACE CARBON STEEL FLANGE

PART #	SIZE	LIST PRICE
107060	1/2"	---
107061	3/4"	---
107062	1"	---
107063	1-1/4"	---
107064	1-1/2"	---
107065	2"	---
107066	2-1/2"	---
107067	3"	---
107069	4"	---
107071	6"	---
107072	8"	---
107073	10"	---
	12"	---

NOMINAL PIPE SIZE	DEPTH OF SOCKET IN.	DRILLING			BOLTING				APPROXIMATE WEIGHT		
		BOLT CIRCLE DIAME-TER	NUMBER OF HOLES	DIAME-TER OF HOLES	DIAME-TER OF BOLTS (INCH)	MACHINE BOLT LENGTH	STUD BOLT LENGTH		WELDING NECK	SLIP-ON AND THREAD-ED	BLIND
						RAISED FACE	RAISED FACE	RING JOINT			
	Y								LBS	LBS	LBS
1/2	.382	2.382	4	.618	1/2	2.00	2.252	-	1.146	1.036	1.036
3/4	.441	2.752	4	.618	1/2	2.00	2.50	-	2.028	1.653	1.389
1	.500	3.118	4	.618	1/2	2.252	2.50	3.00	2.425	1.893	2.094
1-1/4	.559	3.50	4	.618	1/2	2.252	2.752	3.252	3.086	3.086	3.086
1-1/2	.618	3.882	4	.618	1/2	2.50	2.752	3.252	3.99	3.109	3.571
2	.689	4.752	4	.752	5/8	2.752	3.252	3.752	6.173	4.982	5.82
2-1/2	.752	5.5	4	.752	5/8	3.00	3.50	4.00	9.436	7.562	8.951
3	.811	6.0	4	.752	5/8	3.00	3.50	4.00	11.42	8.818	11.023
4	.941	7.50	8	.752	5/8	3.00	3.50	4.00	16.138	12.677	16.535
6	1.059	9.50	8	.882	3/4	3.252	4.00	4.50	24.824	17.196	26.455
8	1.252	11.752	8	.882	3/4	3.50	4.252	4.752	39.683	28.66	44.092
10	1.311	14.252	12	1.00	7/8	4.00	4.50	5.00	55.116	37.699	66.139
12	1.559	17	12	1.00	7/8	4.00	4.752	5.252	85.936	61.024	97.003

WARNING: This product can expose you to chemicals, including lead, which are known to the State of California to cause cancer and birth defects or other reproductive harm. For more information, visit www.P65Warnings.ca.gov

FORGED STEEL FLANGES

PLUMBING

ASTMA105
ASME SA105
ANSI B16.5

• A105 Forged Steel

• CLASS 150

(1-1/2 thru 6" available in #316 Stainless Steel add SS to part#)

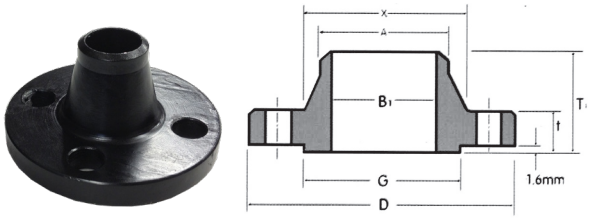

WELD NECK CARBON STEEL FLANGE

PART #	SIZE	LIST PRICE
	1/2"	---
	3/4"	---
	1"	---
	1-1/4"	---
107004	1-1/2"	---
107005	2"	---
	2-1/2"	---
107007	3"	---
107009	4"	---
107011	6"	---

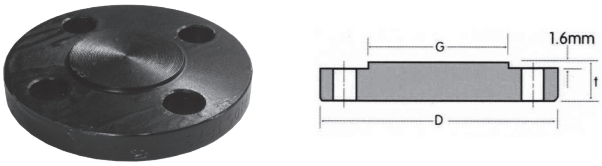

BLIND 1/16" RAISED FACE CARBON STEEL FLANGE

PART #	SIZE	LIST PRICE
	1/2"	---
	3/4"	---
107042	1"	---
	1-1/4"	---
107044	1-1/2"	---
107045	2"	---
	2-1/2"	---
107047	3"	---
107049	4"	---
	6"	---

NOMINAL PIPE SIZE	OUTSIDE DIAMETER	O.D OF RAISED FACE	DIAMETER AT BASE OF HUB	THICKNESS	BORE	LENGTH THRU HUB	
					WELDING NECK SOCKET WELDING	WELDING NECK	SLIP-ON THREADED SOCKET WELDING
	D	G	X	T	B1	T1	T2
1/2	3.504	1.382	1.189	.441	.618	1.882	.618
3/4	3.898	1.689	1.50	.50	.819	2.059	.618
1	4.252	2.00	1.941	.559	1.051	2.189	.689
1-1/4	4.606	2.50	2.311	.618	1.382	2.252	.811
1-1/2	5.00	2.882	2.559	.689	1.610	2.441	.882
2	5.984	3.618	3.059	.752	2.071	2.50	1.00
2-1/2	7.008	4.118	3.559	.882	2.469	2.752	1.118
3	7.52	5.00	4.252	.941	3.071	2.752	1.189
4	9.016	6.189	5.311	.941	4.031	3.00	1.311
6	10.984	8.50	7.559	1.00	6.071	3.50	1.559
8	13.504	10.618	9.689	1.118	7.980	4.00	1.752
10	15.984	12.752	12.00	1.189	10.02	4.00	1.941
12	19.016	15.00	14.382	1.252	12.00	4.50	2.189

WARNING: This product can expose you to chemicals, including lead, which are known to the State of California to cause cancer and birth defects or other reproductive harm. For more information, visit www.P65Warnings.ca.gov

BLACK AND GALV. DUCTILE IRON REDUCING COMPANION FLANGES

PLUMBING

THREADED COMPANION FLANGE CLASS 125 PATTERN (BLACK & GALVANIZED)

* Dimensions, faced and drilled in accordance with asme b16.42/Awwa c110
* Coating: available in black electrophoretic coating and hot dip galvanized* hot-dipped galvanized conform to astm a153; companion flange threads conform to asme b1.20.1
* Application: waterworks, pump, irrigation
* 150psi

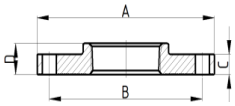

BLACK

PART #	DESCRIPTION (DI FLANGE)	A (INCH)	B (INCH)	C (INCH)	D (INCH)	BOLT HOLE SIZE	NO. OF HOLES	UNIT WEIGHT (KG)	
108075	3" x 2"	7.50	6.00	0.75	1.19	ϕ0.75	4	4.3827	---
108076	3" x 2-1/2"	7.50	6.00	0.75	1.19	ϕ0.75	4	4.2013	---
108077	4" x 1-1/2"	9.00	7.50	0.94	1.31	ϕ0.75	8	6.8352	---
108088	4" x 2"	9.00	7.50	0.94	1.31	ϕ0.75	8	6.4168	---
108089	4" x 2-1/2"	9.00	7.50	0.94	1.31	ϕ0.75	8	6.3343	---
108090	4" x 3"	9.00	7.50	0.94	1.31	ϕ0.75	8	6.081	---
108091	5" x 4"	10.00	8.50	0.94	1.44	ϕ0.875	8	6.8761	---
108094	6" x 2"	11.00	9.50	1.00	1.56	ϕ0.875	8	10.6349	---
108095	6" x 3"	11.00	9.50	1.00	1.56	ϕ0.875	8	10.1831	---
108092	6" x 4"	11.00	9.50	1.00	1.56	ϕ0.875	8	9.4563	---
108096	8" x 4"	13.50	11.75	1.12	1.75	ϕ0.875	8	17.1296	---
108097	8" x 6"	13.50	11.75	1.12	1.75	ϕ0.875	8	15.2184	---
108098	8" x 2"	16.00	14.25	1.19	1.94	ϕ1	12	26.54	---
108099	8" x 3"	---	---	---	---	---	---	---	---
108100	10" x 2"	---	---	---	---	---	---	---	---
108101	12" x 2"	---	---	---	---	---	---	---	---

GALVANIZED

108031	2-1/2" x 2"	6.00	4.75	0.75	1.19	ϕ0.75	4	3.623	---
108032	3" x 2"	7.50	6.00	0.75	1.19	ϕ0.75	4	4.3827	---
108033	3" x 2-1/2"	7.50	6.00	0.75	1.19	ϕ0.75	4	4.2013	---
108034	4" x 2"	9.00	7.50	0.94	1.31	ϕ0.75	8	6.4168	---
108035	4" x 2-1/2"	9.00	7.50	0.94	1.31	ϕ0.75	8	6.3343	---
108036	4" x 3"	9.00	7.50	0.94	1.31	ϕ0.75	8	6.081	---
108038	6" x 2"	11.00	9.50	1.00	1.56	ϕ0.875	8	10.6349	---
108039	6" x 2-1/2"	11.00	9.50	1.00	1.56	ϕ0.875	8	10.5386	---
108037	6" x 4"	11.00	9.50	1.00	1.56	ϕ0.875	8	9.4563	---
108040	8" x 4"	13.50	11.75	1.12	1.75	ϕ0.875	8	17.1296	---
108041	8" x 6"	13.50	11.75	1.12	1.75	ϕ0.875	8	15.2184	---

WARNING: This product can expose you to chemicals, including lead, which are known to the State of California to cause cancer and birth defects or other reproductive harm. For more information, visit www.P65Warnings.ca.gov

BLACK AND GALVANIZED COMPANION FLANGES

PLUMBING

DUCTILE IRON THREADED COMPANION FLANGES

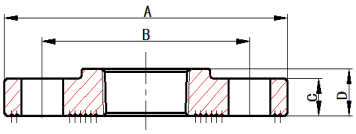

*Dimensions, faced and drilled in accordance with asme b16.42/Awwa c110
*Coating: available in black electrophoretic coating and hot dip galvanized
*Hot-dipped galvanized conform to astm a153; companion flange threads conform to asme b1.20.1 *Application: water-works, pump, irrigation

BLACK

PART # (BLACK)	DESCRIPTION (THREADED)	SIZE (INCH)	A (INCH)	B (INCH)	C (INCH)	D (INCH)	BOLT HOLE SIZE	NO. OF HOLES	UNIT WEIGHT (KG)	
108062	1 150	1"	4.25	3.12	0.44	0.75	ϕ0.625	4	0.8347	---
108063	1 1/4 150	1-1/4"	4.62	3.5	0.5	0.81	ϕ0.625	4	1.0797	---
108064	1 1/2 150	1-1/2"	5	3.88	0.56	0.88	ϕ0.625	4	1.3217	---
108065	2 150	2"	6	4.75	0.62	1	ϕ0.75	4	2.1457	---
108066	2 1/2 150	2-1/2"	7	5.5	0.69	1.12	ϕ0.75	4	3.4182	---
108067	3 150	3"	7.5	6	0.75	1.19	ϕ0.75	4	3.9051	---
108069	4 150	4"	9	7.5	0.94	1.31	ϕ0.75	8	5.5254	---
108071	6 150	6"	11	9.5	1	1.56	ϕ0.875	8	7.5328	---
108072	8 150	8"	13.5	11.75	1.12	1.75	ϕ0.875	8	13.0201	---
108073	10 150	10"	16	14.25	1.19	1.94	ϕ1	12	22.854	---
108074	12 150	12"	19	17	1.25	2.19	ϕ1	12	26.5451	---

GALVANIZED

108025	2 150	2"	6	4.75	0.62	1	ϕ0.75	4	2.1457	---
108026	2 1/2 150	2-1/2"	7	5.5	0.69	1.12	ϕ0.75	4	3.4182	---
108027	3 150	3"	7.5	6	0.75	1.19	ϕ0.75	4	3.9051	---
108028	4 150	4"	9	7.5	0.94	1.31	ϕ0.75	8	5.5254	---
108029	6 150	6"	11	9.5	1	1.56	ϕ0.875	8	7.5328	---

BLIND FLANGES

PART # (BLACK)	DESCRIPTION (THREADED)	SIZE (INCH)	A (INCH)	B (INCH)	C (INCH)	BOLT HOLE SIZE	NO. OF HOLES	UNIT WEIGHT (KG)	
108065BF		2"	6	4.75	0.62	ϕ0.75	4	2.3731	
108067BF		3"	7.5	6	0.94	ϕ0.75	4	4.8547	
108069BF		4"	9	7.5	0.94	ϕ0.75	8	6.5341	
108071BF		5"	10	8.5	0.94	ϕ0.875	8	7.9894	
108070BF		6"	11	9.5	1	φ0.875	8	10.811	
108072BF		8"	13.5	11.75	1.12	φ0875	8	18.6264	
108073BF		10"	16	14.25	1.19	φ1	12	26.2487	

WARNING: This product can expose you to chemicals, including lead, which are known to the State of California to cause cancer and birth defects or other reproductive harm. For more information, visit www.P65Warnings.ca.gov

GASKET SETS
PLUMBING

#150 BOLT & GASKET SET W/ PLATED STEEL BOLTS/NUTS & FULL FACE RED RUBBER GASKETS

PART #	SIZE	LIST
987245	2″ Bolt & Gasket Set	
987246	2-1/2″ Bolt & Gasket Set	
987247	3″ Bolt & Gasket Set	
987248	4″ Bolt & Gasket Set	
987249	5″ Bolt & Gasket Set	
987250	6″ Bolt & Gasket Set	
987251	8″ Bolt & Gasket Set	
987252	10″ Bolt & Gasket Set	
987253	12″ Bolt & Gasket Set	

#150 BOLT & GASKET SET W/ PLATED STEEL BOLTS/NUTS & NON-ASBESTOS GASKETS

PART #	SIZE	LIST
987254	2″ Bolt & Gasket Set	
987255	2-1/2″ Bolt & Gasket Set	
987256	3″ Bolt & Gasket Set	
987257	4″ Bolt & Gasket Set	
987258	5″ Bolt & Gasket Set	
987259	6″ Bolt & Gasket Set	
987260	8″ Bolt & Gasket Set	
987261	10″ Bolt & Gasket Set	
987262	12″ Bolt & Gasket Set	

#150 BOLT & GASKET SET W/ 304SS BOLTS/NUTS & FULL FACE RED RUBBER GASKETS

PART #	SIZE	LIST
988245	2″ Bolt & Gasket Set	
988246	2-1/2″ Bolt & Gasket Set	
988247	3″ Bolt & Gasket Set	
988248	4″ Bolt & Gasket Set	
988249	5″ Bolt & Gasket Set	
988250	6″ Bolt & Gasket Set	
988251	8″ Bolt & Gasket Set	
988252	10″ Bolt & Gasket Set	
988253	12″ Bolt & Gasket Set	

WARNING: This product can expose you to chemicals, including lead, which are known to the State of California to cause cancer and birth defects or other reproductive harm. For more information, visit www.P65Warnings.ca.gov

GASKET SETS

PLUMBING

#150 BOLT & GASKET SET W/ 304SS BOLTS/NUTS & NON-ASBESTOS GASKETS

PART #	SIZE	LIST
988254	2″ Bolt & Gasket Set	
988255	2-1/2″ Bolt & Gasket Set	
988256	3″ Bolt & Gasket Set	
988257	4″ Bolt & Gasket Set	
988258	5″ Bolt & Gasket Set	
988259	6″ Bolt & Gasket Set	
988260	8″ Bolt & Gasket Set	
988261	10″ Bolt & Gasket Set	
988262	12″ Bolt & Gasket Set	

FULL FACE RED RUBBER GASKET

PART #	SIZE	LIST
988400	2″ Gasket	
988401	2-1/2″ Gasket	
988402	3″ Gasket	
988403	4″ Gasket	
988404	5″ Gasket	
988405	6″ Gasket	
988406	8″ Gasket	
988407	10″ Gasket	
988408	12″ Gasket	

NON-ASBESTOS RING GASKET

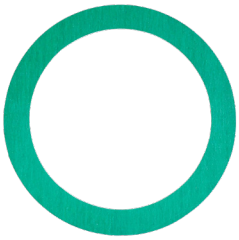

PART #	SIZE	LIST
987400	2″ Gasket	
987401	2-1/2″ Gasket	
987402	3″ Gasket	
987403	4″ Gasket	
987404	5″ Gasket	
987405	6″ Gasket	
987406	8″ Gasket	
987407	10″ Gasket	
987408	12″ Gasket	

WARNING: This product can expose you to chemicals, including lead, which are known to the State of California to cause cancer and birth defects or other reproductive harm. For more information, visit www.P65Warnings.ca.gov

SAE 45° FLARE

Tube O.D.	1/8	3/16	1/4	5/16	3/8	7/16	1/2	5/8	3/4
Thread Size-B	5/16-24	3/8-24	7/16-20	1/2-20	5/8-18	11/16-16	3/4-16	7/8-14	1-1/16-14

▪Typical Application
LP and natural gas, flammable liquids, instrumentation, refrigeration, power steering, hydraulic and pneumatic systems.

▪Working Pressure Ranges
Temperature and type of tubing used are important factors. However, the following table is a good guide for proper selection. Temperature 73°F with copper tubing:

PSI	Tube O.D. (in.)	Tube Wall (in.)
2800	1/8	.030
1900	3/16	.030
1400	1/4	.030
1200	5/16	.032
1000	3/8	.032
750	1/2	.032
650	5/8	.035
550	3/4	.035
450	7/8	.035

▪Vibration
Good resistance - use long nut when greater vibration resistance is required.

▪Temperature Range
-65°F to +250°F (-53°C to +121°C) range at maximum operating pressures.

▪Used With
Copper, brass, aluminum and steel hydraulic tubing that can be flared.

▪ Tolerance
+/- .03 on all dimensions. Dimension data can change without notice. Please call us when dimensions are critical.

▪Conformance
Meets specifications and standards of ASA, ASME, SAE and MS (Military standards).

Assembly Instructions
1- Cut tubing to desired length. Make sure all burrs are removed and ends are cut square.
2- Slide nut on tube. Threaded end "A" of nut must face out.
3- Flare end of tube with a 45° flaring tool.
a-Measure flare diameter.
b- Examine flare for excessive thin out.
4- Lubricate threads and assemble to fitting body. Nut should be turned hand tight.
5- Tighten assembly with wrench until a solid feeling is encountered. From that point, apply a one-sixth turn.
Note: Do not over-torque as it may damage the fitting or split the tubing at the flare.

▪ See Lead Free Flare Fittings

Actual O.D. of Flare Fittings

WARNING: This product can expose you to chemicals, including lead, which are known to the State of California to cause cancer and birth defects or other reproductive harm. For more information, visit www.P65Warnings.ca.gov

SAE 45° FLARE
PLUMBING

SHORT ROD NUT

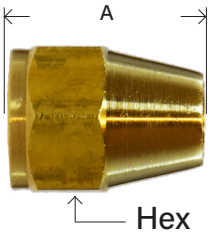

41S
411S

SAE# 010110

PART #	THREAD SIZE UNF	THREAD	A	HEX	APPROX. WT. LBS.	LIST PRICE
10013	1/8″	5/16-24	0.50	0.37	0.01	---
10014	3/16″	3/8-24	0.62	0.43	0.02	---
10015	1/4″	7/16-20	0.75	0.56	0.03	---
10015L	1/4"	7/16-20	0.75	0.50	0.03	---
10016	5/16″	1/2-20	0.88	0.62	0.04	---
10017L	3/8″	5/8-18	0.77	0.75	0.05	---
10017	3/8″	5/8-18	1.00	0.75	0.04	---
10018	7/16″	11/16-16	1.06	0.81	0.06	---
10019L	1/2″	3/4-16	0.93	0.87	0.06	---
10019	1/2″	3/4-16	1.12	0.87	0.09	---
10020L	5/8″	7/8-14	1.08	1.00	0.10	---
10020	5/8″	7/8-14	1.31	1.06	0.15	---
10021	3/4″	1-1/16-14	1.50	1.25	0.24	---
10022	7/8″	1-1/4-12	1.62	1.50	0.36	---
10026	1″	1-3/8-12	1.81	1.62	0.44	---

20910 41FS 1110 N1 41FX 441S 'L'

LONG ROD NUT

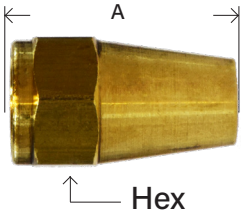

41L

SAE# 010111

PART #	THREAD SIZE UNF	A	HEX	APPROX. WT. LBS.	LIST PRICE
10001	1/8″	0.75	0.37	0.01	---
10002	3/16″	0.81	0.43	0.02	---
10003L	1/4"	0.98	0.55	0.03	---
10003	1/4″	0.94	0.56	0.03	---
10004	5/16″	1.12	0.62	0.04	---
10005	3/8″	1.31	0.75	0.06	---
10006	1/2″	1.62	0.87	0.12	---
10007	5/8″	1.88	1.06	0.20	---

41FL N2 241 441 41

"L" means light pattern.

These fittings are completely interchangeable with full pattern fittings, but have been modified in some way. This modification is usually in the length of the pipe threads. Used in plumbing and light industrial applications.

LONG FORGED NUT

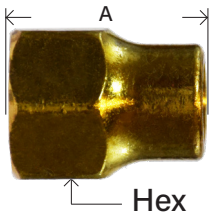

640L
641L

SAE# 010167

PART #	THREAD SIZE UNF	A	HEX	APPROX. WT. LBS.	LIST PRICE
10028	1/4″	0.94	0.62	0.05	---
10030	3/8″	1.06	0.81	0.08	---
10031	1/2″	1.19	0.94	0.12	---
10032	5/8″	1.44	1.06	0.26	---

41FF 39 N4 14FL 641

WARNING: This product can expose you to chemicals, including lead, which are known to the State of California to cause cancer and birth defects or other reproductive harm. For more information, visit www.P65Warnings.ca.gov

SAE 45° FLARE
PLUMBING

SHORT FORGED NUT

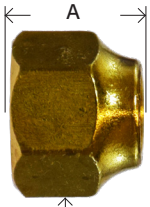

641S
6401S
SAE# 010166

PART #	THREAD SIZE UNF	A	HEX	APPROX. WT. LBS.	LIST PRICE
10038	3/16″	0.56	0.50	0.02	---
10039	1/4″	0.60	0.62	0.04	---
10040	5/16″	0.66	0.69	0.04	---
10041	3/8″	0.70	0.81	0.06	---
10042	1/2″	0.82	0.94	0.08	---
10043	5/8″	0.95	1.06	0.12	---
10044	3/4″	1.16	1.31	0.22	---
10045	7/8″	1.18	1.38	0.30	---

14FS 41FFS 40 641-S 1116 NS4

EXTRA HEAVY SHORT FORGED NUT

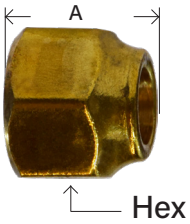

641SH
6401SXH

PART #	THREAD SIZE UNF	A	HEX	APPROX. WT. LBS.	LIST PRICE
10046	1/4″	0.63	0.75	0.04	---
10047	3/8″	0.72	0.88	0.06	---
10048	1/2″	0.88	1.00	0.08	---
10049	5/8″	0.98	1.12	0.12	---

NSA

FORGED REDUCING NUT

660
662S

PART #	FEMALE FLARE X OD	A	HEX	APPROX. WT. LBS.	LIST PRICE
10052	3/8″ x 1/4″	0.72	0.81	0.06	---
10054	1/2″ x 3/8″	0.81	0.94	0.08	---
10056	5/8″ x 1/2″	0.97	1.06	0.12	---
10058	3/4″ x 5/8″	1.17	1.31	0.30	---

NSR4 14FS 41FRS 40R 662-S

FLARED PLUG

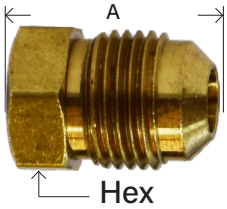

39
439

PART #	THREAD SIZE UNF	A	HEX	APPROX. WT. LBS.	LIST PRICE
10062	1/8"	0.53	0.34	0.01	
10063	3/16″	0.59	0.50	0.02	---
10064	1/4″	0.69	0.43	0.02	---
10065	5/16″	0.78	0.50	0.04	---
10066	3/8″	0.88	0.62	0.06	---
10067	1/2″	1.06	0.75	0.10	---
10068	5/8″	1.19	0.87	0.14	---
10069	3/4"	1.32	1.06	0.22	---

58 639F PF 57 P2 2229 439

WARNING: This product can expose you to chemicals, including lead, which are known to the State of California to cause cancer and birth defects or other reproductive harm. For more information, visit www.P65Warnings.ca.gov

SAE 45° FLARE
PLUMBING

FLARED CAP

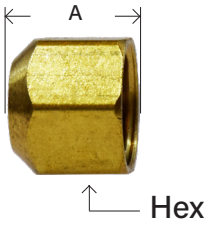

40
440

PART #	THREAD SIZE UNF	A	HEX	APPROX. WT. LBS.	LIST PRICE
10073	1/8"	0.46	0.37	0.02	
10074	3/16″	0.47	0.50	0.02	---
10075	1/4″	0.48	0.50	0.02	---
10075EH	1/4"	0.54	0.57	0.02	
10076	5/16″	0.62	0.62	0.04	---
10077	3/8″	0.58	0.75	0.03	---
10078	1/2″	0.69	0.81	0.14	---
10079	5/8″	0.81	0.94	0.20	---
10080	3/4″	1.17	1.37	0.30	---

640F 41FC 56 N5 2129 54 440

FINGER TIGHTENING CAP

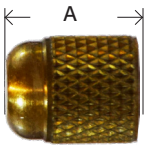

NFTS
FTC5
- Neoprene
- **O-Ring Included**

PART #	THREAD SIZE UNF	A	APPROX. WT. LBS.	LIST PRICE
10081	1/4"	0.62	0.02	---

NFT5

COPPER GASKET

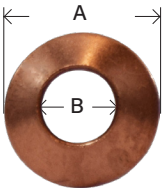

463
SAE# 010113

PART #	SIZE	A	B	APPROX. WT. LBS.	LIST PRICE
10084	3/16″	0.31	0.12	0.01	---
10085	1/4″	0.36	0.19	0.01	---
10086	5/16″	0.42	0.22	0.01	---
10087	3/8″	0.55	0.28	0.01	---
10088	1/2″	0.66	0.41	0.01	---
10089	5/8″	0.77	0.50	0.01	---
10090	3/4″	0.95	0.62	0.01	---

B2 2GF 6251 FG 157 59 46

COPPER BONNET

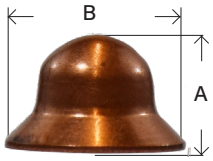

464
SAE# 010114

PART #	SIZE	A	B	APPROX. WT. LBS.	LIST PRICE
10095	1/4″	0.22	0.36	0.01	---
10097	3/8″	0.34	0.55	0.01	---
10098	1/2″	0.41	0.66	0.01	---
10099	5/8″	0.44	0.77	0.01	---

B1 3GF 64C 57 156 FB 695 464

WARNING: This product can expose you to chemicals, including lead, which are known to the State of California to cause cancer and birth defects or other reproductive harm. For more information, visit www.P65Warnings.ca.gov

SAE 45° FLARE
PLUMBING

MALE BALL CHECK CONNECTOR

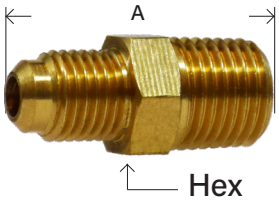

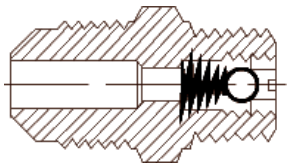

43
403

PART #	MALE FLARE X MALE NPTF	A	HEX	APPROX. WT. LBS.	LIST PRICE
10131*	1/4" x 1/8"	1.06	0.43		---
10256WC	1/4″ x 1/4″	1.24	0.6	0.04	---
10133*	3/8″ x 1/4″	1.31	0.62	0.08	---

43A

* Note: Ball & Spring position may be reversed to change flow/check position. Min working pressure 3 PSI.

UNION

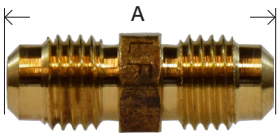

42
402
SAE# 010101

PART #	THREAD SIZE UNF	A	HEX	APPROX. WT. LBS.	LIST PRICE
10104	1/8″	0.91	0.31	0.02	---
10105	3/16″	1.06	0.37	0.02	---
10106L	1/4″	1.19	0.43	0.03	---
10106	1/4″	1.19	0.43	0.03	---
10107	5/16″	1.34	0.50	0.05	---
10108L	3/8″	1.50	0.62	0.09	---
10108	3/8′	1.50	0.62	0.09	---
10109L	1/2″	1.67	0.75	0.12	---
10109	1/2″	1.81	0.75	0.14	---
10110L	5/8″	2.00	0.87	0.20	---
10110	5/8″	2.12	0.87	0.20	---
10111	3/4″	2.44	1.06	0.35	---
10112	7/8″	2.72	1.25	0.52	---

42F U2

"L" means light pattern.

These fittings are completely interchangeable with full pattern fittings, but have been modified in some way. This modification is usually in the length of the pipe threads. Used in plumbing and light industrial applications.

REDUCING UNION

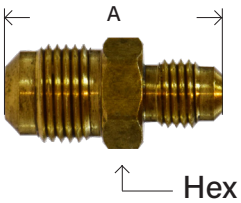

42R
506

PART #	THREAD SIZE UNF	A	HEX	APPROX. WT. LBS.	LIST PRICE
10115	1/4" x 1/8"	1.11	0.44	0.03	---
10116	1/4" x 3/16"	1.12	0.44	0.03	---
10117	5/16″ x 1/4″	1.28	0.50	0.04	---
10118	3/8″ x 1/4″	1.38	0.62	0.06	---
10119	3/8″ x 5/16″	1.44	0.62	0.08	---
10120	1/2″ x 1/4″	1.53	0.75	0.10	---
10121	1/2″ x 3/8″	1.69	0.75	0.10	---
10122	5/8″ x 3/8″	1.88	0.87	0.17	---
10123	5/8″ x 1/2″	1.87	0.87	0.14	---
10126	3/4" x 1/2"	2.18	1.06	0.26	---
10127	3/4" x 5/8"	2.20	1.06	0.27	---

656F UR2 42-R

WARNING: This product can expose you to chemicals, including lead, which are known to the State of California to cause cancer and birth defects or other reproductive harm. For more information, visit www.P65Warnings.ca.gov

SAE 45° FLARE
PLUMBING

UNION TEE

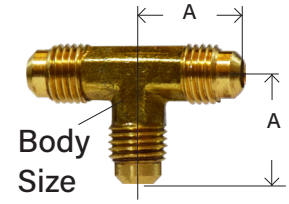

Forged Tee

44F
404
244
SAE# 010401

PART #	THREAD SIZE UNF	A	BODY SIZE	APPROX. WT. LBS.	LIST PRICE
10157	1/8″	0.67	0.36	0.04	---
10158	3/16″	0.75	0.36	0.06	---
10159	1/4″	0.78	0.36	0.06	---
10160	5/16″	0.91	0.44	0.10	---
10161	3/8″	1.00	0.44	0.12	---
10162	1/2″	1.16	0.59	0.19	---
10163	5/8″	1.41	0.69	0.30	---
10164	3/4″	1.64	0.88	0.53	---
10165	7/8″	1.75	1.25	0.93	---

244F T2 144F

REDUCING TEE 1 X 2 X 3

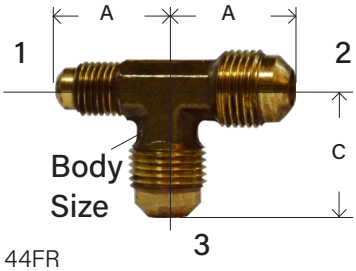

44FR
509

PART #	THREAD SIZE UNF 1X2X3	A	C	BODY SIZE	APPROX. WT. LBS.	LIST PRICE
10170	1/4″ x 1/4″ x 3/8″	0.91	1.00	0.44	0.10	---
10175	3/8″ x 3/8″ x 1/2″	1.00	1.19	0.59	0.14	---
10176	3/8″ x 3/8″ x 5/8″	1.16	1.44	0.69	0.16	---
10181	1/2″ x 1/2″ x 3/8″	1.16	1.12	0.59	0.19	---
10189	5/8″ x 5/8″ x 1/2″	1.38	1.28	0.69	0.28	---

144F TR2 659F 684F 44R

MALE BRANCH TEE

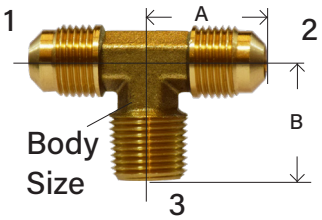

Forged Tee

45R
245
405
SAE# 010425

PART #	MALE FLARE X MALE NPT (1&2)X3	A	B	BODY SIZE	APPROX. WT. LBS.	LIST PRICE
10203	3/16″ x 1/8″	0.75	0.75	0.36	0.10	---
10204	1/4″ x 1/8″	0.78	0.75	0.36	0.05	---
10205	1/4″ x 1/4″	0.88	0.88	0.44	0.08	---
10207	5/16″ x 1/8″	0.89	0.78	0.44	0.08	---
10208	5/16″ x 1/4″	0.94	0.94	0.44	0.08	---
10209	3/8″ x 1/8″	1.00	0.91	0.44	0.14	---
10210	3/8″ x 1/4″	1.00	0.94	0.44	0.12	---
10211	3/8″ x 3/8″	1.00	1.00	0.47	0.13	---
10212	3/8″ x 1/2″	1.12	1.22	0.69	0.22	---
10213	1/2″ x 1/4″	1.16	1.00	0.59	0.20	---
10214	1/2″ x 3/8″	1.16	1.14	0.59	0.19	---
10215	1/2″ x 1/2″	1.22	1.22	0.69	0.24	---
10216	1/2″ x 3/4″	1.38	1.41	0.88	0.22	---
10218	5/8″ x 1/2″	1.41	1.31	0.69	0.29	---

T1 145F 45

WARNING: This product can expose you to chemicals, including lead, which are known to the State of California to cause cancer and birth defects or other reproductive harm. For more information, visit www.P65Warnings.ca.gov

SAE 45° FLARE
PLUMBING

FEMALE ADAPTER

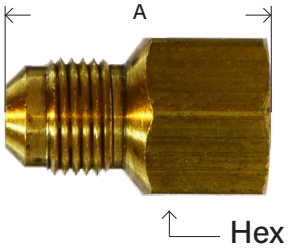

46
246
406

SAE# 010103

PART #	MALE FLARE X FEMALE NPTF	A	HEX	APPROX. WT. LBS.	LIST PRICE
10227	3/16″ x 1/8″	0.97	0.56	0.03	---
10228L	1/4″ x 1/8″	1.03	0.56	0.03	---
10228	1/4″ x 1/8″	1.03	0.56	0.04	---
10229L	1/4″ x 1/4″	1.06	0.68	0.06	---
10229	1/4″ x 1/4″	1.23	0.68	0.07	---
10230	1/4″ x 3/8″	1.18	0.81	0.08	---
10231	1/4″ x 1/2″	1.31	0.94	0.06	---
10232	5/16″ x 1/8″	1.06	0.56	0.05	---
10233	5/16″ x 1/4″	1.28	0.68	0.08	---
10234	3/8″ x 1/8″	1.09	0.62	0.08	---
10235L	3/8″ x 1/4″	1.25	0.68	0.08	---
10235	3/8″ x 1/4″	1.31	0.81	0.08	---
10236L	3/8″ x 3/8″	1.25	0.81	0.08	---
10236	3/8″ x 3/8″	1.25	0.81	0.10	---
10237L	3/8″ x 1/2″	1.31	0.94	0.08	---
10237	3/8″ x 1/2″	1.60	1.00	0.16	---
10238	3/8″ x 3/4″	1.41	1.18	0.11	---
10239	1/2″ x 1/4″	1.37	0.75	0.10	---
10240L	1/2″ x 3/8″	1.38	0.81	0.12	---
10240	1/2″ x 3/8″	1.50	0.81	0.14	---
10241L	1/2″ x 1/2″	1.42	0.94	0.10	---
10241	1/2″ x 1/2″	1.75	1.00	0.12	---
10242L	1/2" x 3/4"	1.40	1.10	0.16	---
10242	1/2″ x 3/4″	1.60	1.12	0.16	---
10243	5/8″ x 3/8″	1.24	0.87	0.12	---
10244L	5/8" x 1/2"	1.51	0.86	0.15	---
10244	5/8″ x 1/2″	1.62	0.94	0.12	---
10245	5/8″ x 3/4″	1.65	1.12	0.17	---
10246	3/4″ x 1/2″	1.74	1.18	0.32	---
10247	3/4″ x 3/4″	1.75	1.18	0.22	---
10248	7/8″ x 3/4″	1.94	1.31	0.26	---

"L" means light pattern.

These fittings are completely interchangeable with full pattern fittings, but have been modified in some way. This modification is usually in the length of the pipe threads. Used in plumbing and light industrial applications.

WARNING: This product can expose you to chemicals, including lead, which are known to the State of California to cause cancer and birth defects or other reproductive harm. For more information, visit www.P65Warnings.ca.gov

SAE 45° FLARE
PLUMBING

MALE ADAPTER

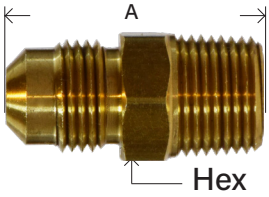

48
248
408

SAE# 010102

PART #	MALE FLARE X MALE NPTF	A	HEX	APPROX. WT. LBS.	LIST PRICE
10253	1/8″ x 1/8″	0.92	0.43	0.02	---
10254	3/16″ x 1/8″	1.00	0.43	0.03	---
10255L	1/4″ x 1/8″	1.06	0.43	0.03	---
10255	1/4″ x 1/8″	1.06	0.43	0.04	---
10256L	1/4″ x 1/4″	1.15	0.56	0.03	---
10256	1/4″ x 1/4″	1.25	0.56	0.04	---
10257	1/4″ x 3/8″	1.31	0.68	0.06	---
10258	1/4″ x 1/2″	1.44	0.87	0.11	---
10259L	5/16″ x 1/8″	1.15	0.50	0.04	---
10259	5/16″ x 1/8″	1.16	0.50	0.04	---
10260L	5/16″ x 1/4″	1.31	0.56	0.06	---
10260	5/16″ x 1/4″	1.34	0.56	0.06	---
10261	5/16″ x 3/8″	1.38	0.68	0.08	---
10262	3/8″ x 1/8″	1.25	0.62	0.07	---
10262L	3/8" x 1/8"				
10263L	3/8″ x 1/4″	1.31	0.62	0.06	---
10263	3/8″ x 1/4″	1.44	0.62	0.08	---
10263SS	3/8" x 1/4"				
10264L	3/8″ x 3/8″	1.37	0.68	0.09	---
10264	3/8″ x 3/8″	1.42	0.68	0.09	---
10264SS	3/8" x 3/8"				
10265L	3/8″ x 1/2″	1.44	0.89	0.12	---
10265	3/8″ x 1/2″	1.69	0.87	0.14	---
10266	3/8″ x 3/4″	1.81	1.06	0.18	---
10267	1/2″ x 1/4″	1.60	0.75	0.11	---
10268L	1/2″ x 3/8″	1.46	0.75	0.10	---
10268	1/2″ x 3/8″	1.62	0.75	0.12	---
10269L	1/2″ x 1/2″	1.62	0.87	0.13	---
10269	1/2″ x 1/2″	1.79	0.87	0.15	---
10270	1/2″ x 3/4″	1.75	1.06	0.22	---
10271	5/8″ x 1/4″	1.81	0.87	0.14	---
10272L	5/8″ x 3/8″	1.67	0.87	0.14	---
10272	5/8″ x 3/8″	1.81	0.87	0.18	---
10273L	5/8″ x 1/2″	1.80	0.87	0.11	---
10273	5/8″ x 1/2″	2.00	0.87	0.20	---
10274	5/8″ x 3/4″	1.85	1.06	0.21	---
10275	3/4″ x 1/2″	2.19	1.06	0.28	---
10276	3/4″ x 3/4″	2.08	1.06	0.28	---
10277	7/8″ x 1/2″	2.22	1.25	0.52	---
10278	7/8″ x 3/4″	2.35	1.25	0.41	---
10279	1″ x 3/4″	2.44	1.43	0.53	---
10280	1″ x 1″	2.44	1.43	0.53	---

U1 48

WARNING: This product can expose you to chemicals, including lead, which are known to the State of California to cause cancer and birth defects or other reproductive harm. For more information, visit www.P65Warnings.ca.gov

SAE 45° FLARE

PLUMBING

90° MALE ELBOW

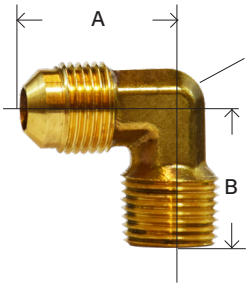

Forged Elbow

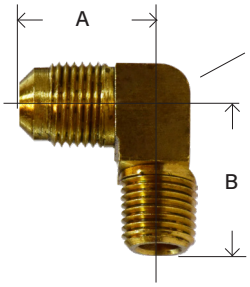

*Barstock Elbow

49
249
409

SAE# 010202

PART #	MALE FLARE X MALE NPTF	A	B	BODY SIZE	APPROX. WT. LBS.	LIST PRICE
10283	1/8″ x 1/8″	0.63	0.73	0.37	0.04	---
10283B*	1/8″ x 1/8″	0.62	0.69	0.43	0.04	---
10284	3/16″ x 1/8″	0.75	0.75	0.38	0.04	---
10284B*	3/16″ x 1/8″	0.75	0.75	0.43	0.06	---
10285	3/16″ x 1/4″	0.81	0.88	0.44	0.08	---
10286	1/4″ x 1/8″	0.84	0.78	0.38	0.04	---
10286L	1/4″ x 1/8″	0.96	0.80	0.37	0.04	---
10286B*	1/4″ x 1/8″	0.81	0.78	0.47	0.05	---
10287	1/4″ x 1/4″	0.81	0.88	0.44	0.05	---
10287B*	1/4″ x 1/4″	0.91	0.93	0.59	0.08	---
10288	1/4″ x 3/8″	0.91	0.91	0.47	0.08	---
10289	1/4″ x 1/2″	1.03	1.09	0.59	0.10	---
10290	5/16″ x 1/8″	0.91	0.88	0.44	0.06	---
10290B*	5/16″ x 1/8″	0.91	0.78	0.52	0.06	---
10291	5/16″ x 1/4″	0.98	0.96	0.44	0.08	---
10291B*	5/16″ x 1/4″	0.95	0.92	0.62	0.08	---
10292	5/16″ x 3/8″	1.06	1.09	0.59	0.08	---
10293	3/8″ x 1/8″	1.00	0.91	0.53	0.08	---
10293B*	3/8″ x 1/8″	1.03	0.91	0.65	0.08	---
10294	3/8″ x 1/4″	1.01	0.89	0.48	0.08	---
10294B*	3/8″ x 1/4″	0.97	1.04	0.68	0.11	---
10295	3/8″ x 3/8″	1.00	0.88	0.47	0.10	---
10295L	3/8″ x 3/8″	0.95	0.89	0.46	0.11	---
10295B*	3/8″ x 3/8″	1.06	1.09	0.69	0.12	---
10296	3/8″ x 1/2″	1.10	1.09	0.59	0.12	---
10297	3/8″ x 3/4″	1.25	1.31	0.81	0.12	---
10298	1/2″ x 1/4″	1.19	1.00	0.59	0.12	---
10298B*	1/2″ x 1/4″	1.22	1.19	0.81	0.12	---
10299	1/2″ x 3/8″	1.10	1.00	0.59	0.13	---
10299B*	1/2″ x 3/8″	1.22	1.12	0.77	0.18	---
10300	1/2″ x 1/2″	1.16	1.13	0.59	0.14	---
10300B*	1/2″ x 1/2″	1.26	1.26	0.94	0.26	---
10301	1/2″ x 3/4″	1.42	1.25	0.81	0.24	---
10311	5/8″ x 1/4″	1.34	1.13	0.72	0.28	---
10302	5/8″ x 3/8″	1.35	1.22	0.72	0.20	---
10302B*	5/8″ x 3/8″	1.41	1.25	0.94	0.20	---
10303	5/8″ x 1/2″	1.35	1.22	0.72	0.20	---
10303L	5/8″ x 1/2″	1.29	1.11	0.70	0.20	---
10303B*	5/8″ x 1/2″	1.41	1.38	0.94	0.20	---
10304	5/8″ x 3/4″	1.44	1.31	0.81	0.25	---
10305	3/4″ x 1/2″	1.67	1.50	0.88	0.34	---
10306	3/4″ x 3/4″	1.67	1.63	0.88	0.30	---
10307	7/8″ x 3/4″	1.75	1.68	1.00	0.44	---

249F 49 E1 149F

WARNING: This product can expose you to chemicals, including lead, which are known to the State of California to cause cancer and birth defects or other reproductive harm. For more information, visit www.P65Warnings.ca.gov

Dimension data can change without notice. Please check when dimensions are critical.

SAE 45° FLARE
PLUMBING

90° FEMALE ELBOW

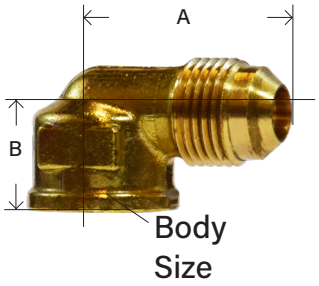

Forged Elbow

50F
250
500
SAE# 010203
* Barstock

PART #	MALE FLARE X FEMALE NPTF	A	B	BODY SIZE	APPROX. WT. LBS.	LIST PRICE
10312	3/16″ x 1/8″	0.81	0.44	0.56	0.05	---
10313	1/4″ x 1/8″	0.90	0.46	0.56	0.06	---
10314	1/4″ x 1/4″	0.97	0.59	0.75	0.08	---
10315	1/4″ x 3/8″	1.03	0.57	0.81	0.09	---
10333	1/4″ x 1/2″	1.08	0.66	1.00	0.12	---
10316	5/16″ x 1/8″	0.94	0.88	0.45	0.08	---
10317	5/16″ x 1/4″	1.03	0.58	0.75	0.06	---
10318	3/8″ x 1/8″	1.00	0.88	0.47	0.10	---
10319	3/8″ x 1/4″	1.06	0.59	0.75	0.09	---
10320	3/8″ x 3/8″	1.06	0.57	0.81	0.10	---
10320B*	3/8″ x 3/8″	1.10	0.75	0.82	0.16	---
10321	3/8″ x 1/2″	1.16	0.66	1.00	0.14	---
10321L	3/8″ x 1/2″	1.21	0.42	0.96	0.13	---
10322	3/8″ x 3/4″	1.28	0.72	1.25	0.12	---
10323	1/2″ x 1/4″	1.25	0.70	0.88	0.13	---
10324	1/2″ x 3/8″	1.25	0.70	0.88	0.12	---
10325	1/2″ x 1/2″	1.29	0.72	1.00	0.18	---
10325L	1/2″ x 1/2″	1.24	0.71	0.98	0.17	---
10326	1/2″ x 3/4″	1.41	0.72	1.25	0.20	---
10327	5/8″ x 3/8″	1.35	1.22	0.72	0.22	---
10328	5/8″ x 1/2″	1.38	0.75	1.00	0.20	---
10329	5/8″ x 3/4″	1.50	0.76	1.25	0.28	---
10330	3/4″ x 1/2″	1.63	1.06	1.06	0.42	---
10331	3/4″ x 3/4″	1.88	1.06	1.31	0.40	---

E3 50 150F

FORGED MALE RUN TEE

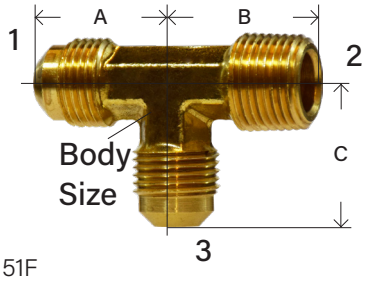

51F
501

PART #	MALE FLARE X MALE NPTF (1&3) X 2	A	B	C	BODY SIZE	APPROX. WT. LBS.	LIST PRICE
10343	3/16″ x 1/8″	0.75	0.75	0.75	0.37	0.05	---
10344	1/4″ x 1/8″	0.78	0.75	0.78	0.37	0.06	---
10345	1/4″ x 1/4″	0.88	0.88	0.88	0.44	0.08	---
10350	3/8″ x 1/4″	1.00	0.94	1.00	0.44	0.12	---
10351	3/8″ x 3/8″	1.00	1.00	1.00	0.47	0.10	---
10352	3/8″ x 1/2″	1.12	1.22	1.12	0.69	0.12	---
10354	1/2″ x 3/8″	1.16	1.09	1.16	0.59	0.18	---
10355	1/2″ x 1/2″	1.22	1.22	1.22	0.69	0.22	---

T3 151F 51

Dimension data can change without notice. Please see our website when dimensions are critical.

WARNING: This product can expose you to chemicals, including lead, which are known to the State of California to cause cancer and birth defects or other reproductive harm. For more information, visit www.P65Warnings.ca.gov

SAE 45° FLARE
PLUMBING

FORGED FLARE CROSS

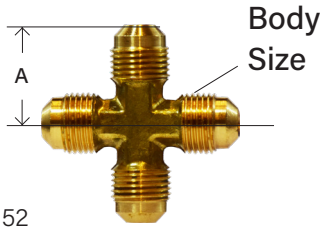

52
502
SAE# 010501

PART #	THREAD SIZE UNF	A	BODY SIZE	APPROX. WT. LBS.	LIST PRICE
10373	1/4″	0.88	0.44	0.10	---
10375	3/8″	1.00	0.44	0.16	---
10376	1/2″	1.16	0.59	0.24	---

455 C1 147F 52

FORGED ADAPTER TEE / SERVICE TEE

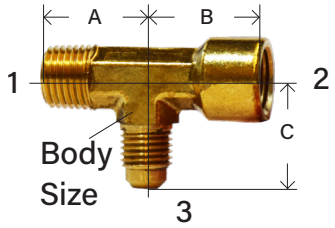

53
503

PART #	SIZE 1 X 2 X 3	A	B	C	BODY SIZE	APPROX. WT. LBS.	LIST PRICE
10382	1/8″ x 1/8″ x 1/4″	0.72	0.53	0.80	0.47	0.08	---
10383	1/4″ x 1/4″ x 1/4″	0.88	1.00	0.91	0.47	0.11	---

T17 53

FORGED 90° FLARE ELBOW

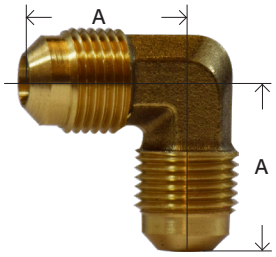

55F
505
* Barstock

PART #	THREAD SIZE UNF	A	APPROX. WT. LBS.	LIST PRICE
10405	3/16″	0.75	0.06	---
10406	1/4″	0.81	0.08	---
10407	5/16″	0.91	0.10	---
10408	3/8″	1.00	0.10	---
10409	1/2″	1.16	0.14	---
10410	5/8″	1.41	0.22	---
10411	3/4″	1.66	0.68	---
10412	7/8″	1.81	0.82	---

E2 155F

FORGED REDUCING ELBOW

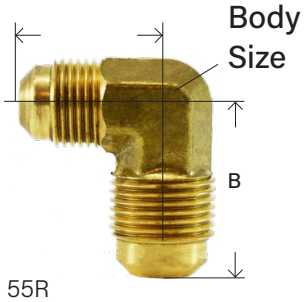

55R
507

PART #	MALE FLARE X MALE FLARE	A	B	BODY SIZE	APPROX. WT. LBS.	LIST PRICE
10416	3/8″ x 1/4″	1.00	0.88	0.47	0.08	---
10419	1/2″ x 3/8″	1.19	1.02	0.59	0.14	---
10421	5/8″ x 1/2″	1.34	1.23	0.72	0.21	---

ER2 657F 55R

WARNING: This product can expose you to chemicals, including lead, which are known to the State of California to cause cancer and birth defects or other reproductive harm. For more information, visit www.P65Warnings.ca.gov

SAE 45° FLARE

PLUMBING

45° ELBOW

Forged

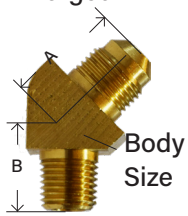

Barstock

54
4945
40945
SAE# 010302
* Barstock

PART #	MALE FLARE X MALE NPTF	A	B	BODY SIZE	APPROX. WT. LBS.	LIST PRICE
10448	1/4″ x 1/8″	0.67	0.64	0.41	0.04	---
10448B*	1/4″ x 1/8″	0.67	0.64	0.44	0.04	---
10449	1/4″ x 1/4″	0.75	0.86	0.53	0.07	---
10449B	1/4" x 1/4"					
10450	5/16″ x 1/8″	0.78	0.64	0.53	0.06	---
10451	5/16″ x 1/4″	0.81	0.86	0.53	0.07	---
10452	3/8″ x 1/4″	0.91	0.86	0.53	0.09	---
10452B*	3/8″ x 1/4″	0.89	0.86	0.64	0.12	---
10453	3/8″ x 3/8″	0.93	0.94	0.59	0.11	---
10453B	3/8" x 3/8"					
10454	3/8″ x 1/2″	0.99	1.17	0.75	0.19	---
10455	1/2″ x 3/8″	1.07	0.88	0.59	0.12	---
10455B*	1/2″ x 3/8″	1.06	0.94	0.76	0.18	---
10456	1/2″ x 1/2″	1.12	1.18	0.75	0.20	---
10456B	1/2" x 1/2"					
10460	5/8″ x 3/8″	1.13	0.95	0.81	0.22	---
10457	5/8″ x 1/2″	1.12	1.17	0.78	0.18	---
10458	3/4″ x 1/2″	1.28	1.16	0.88	0.26	---
10459	3/4″ x 3/4″	1.41	1.20	0.88	0.31	---

E145 54 159F 654F 59FF 254 47 4945

FEMALE 45° FLARE FITTINGS

UNION

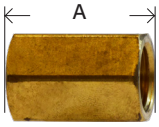

600
600F
SAE# 010107

PART #	FEMALE FLARE X FEMALE FLARE	A	HEX	APPROX. WT. LBS.	LIST PRICE
10135	1/4″	1.00	0.62	0.06	---
10136	3/8″	1.25	0.81	0.14	---
10137	1/2″	1.43	0.94	0.18	---
10138	5/8"	1.69	1.07	0.24	---
10139	3/4"	2.00	1.31	0.42	---

▪ Use with Copper Gasket

2310 U4 660HD 32

FEMALE FLARE ADAPTER

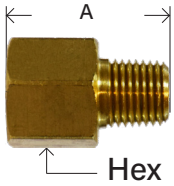

664
SAE# 010106

PART #	FEMALE FLARE X MALE NPTF	A	HEX	APPROX. WT. LBS.	LIST PRICE
10440	1/4″ x 1/8″	0.91	0.62	0.05	---
10441	1/4″ x 1/4″	1.01	0.62	0.06	---
10442	3/8″ x 1/4″	1.28	0.81	0.10	---
10438	3/8" x 1/2"				
10443	1/2″ x 3/8″	1.36	0.94	0.14	---
10444	1/2″ x 1/2″	1.46	0.94	0.14	---

U5 664FHD 33 48-FF

FLARE REDUCER
SAE# 010105

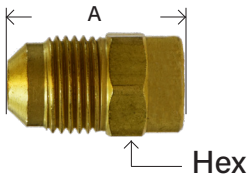

601

PART #	MALE FLARE X FEMALE FLARE	A	HEX	APPROX. WT. LBS.	LIST PRICE
10462	1/4″ x 3/8″	1.22	0.81	0.10	---
10461	1/4″ x 1/2″	1.36	0.94	0.14	---
10463	3/8″ x 1/4″	1.12	0.62	0.06	---
10464	3/8″ x 1/2″	1.44	0.94	0.14	---
10473	3/8″ x 5/8″	1.63	1.12	0.16	---
10467	1/2″ x 3/8″	1.41	0.81	0.13	---
10468	1/2″ x 5/8″	1.68	1.06	0.20	---
10469	5/8″ x 1/2″	1.63	1.00	0.17	---
10470	5/8″ x 3/4″	1.97	1.31	0.31	---

* Available in Stainless Steel. Add SS to the part#

UR3 661FHD 227 46-FF

WARNING: This product can expose you to chemicals, including lead, which are known to the State of California to cause cancer and birth defects or other reproductive harm. For more information, visit www.P65Warnings.ca.gov

BRASS FLARE SWIVEL FITTINGS

FORGED SWIVEL

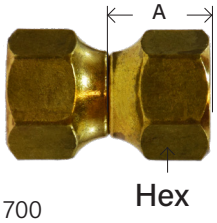

700
SAE# 010108

PART #	FEMALE FLARE UNF	A	HEX	APPROX. WT. LBS.	LIST PRICE
10481	1/4″	0.59	0.62	0.04	---
10482	5/16″	0.62	0.68	0.06	---
10483	3/8″	0.69	0.81	0.10	---
10483L	3/8"	0.63	0.80		---
10484	1/2″	0.81	0.94	0.16	---
10484L	1/2"	0.82	0.92		---
10485	5/8″	0.94	1.06	0.24	---
10486	3/4″	1.12	1.31	0.34	---

1350 US4 14FSV 34

REDUCING SWIVELS

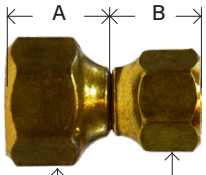

Hex 1
Hex 2

700R

PART #	FEMALE FLARE UNF	A	B	HEX 1	HEX 2	APPROX. WT. LBS.	LIST PRICE
10487	3/8″ x 1/4″	0.72	0.60	0.81	0.62	0.08	---
10488	1/2″ x 3/8″	0.84	0.70	0.94	0.81	0.12	---
10489	5/8″ x 1/2″	0.98	0.82	1.03	0.94	0.22	---

FORGED SWIVEL ELBOWS

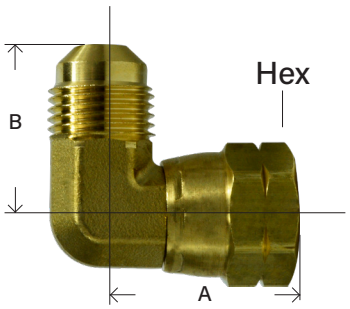

701

PART #	MALE FLARE X FEMALE FLARE	A	B	HEX	APPROX. WT. LBS.	LIST PRICE
10493	1/4″	0.93	0.86	.563	0.12	---
10494	3/8″	1.13	1.1	.75	0.20	---
10495	1/2"	1.29	1.20	.88	0.25	---
10496	5/8"	1.50	1.30	1.00	0.37	---
10497	3/4"	1.83	1.60	1.25	0.54	---

ES4

FLARE SWEAT FITTINGS

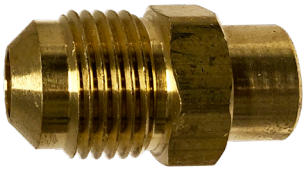

PART #	FLARE X SWEAT	LIST PRICE
10600	1/4" x 1/4"	---
10612	3/8" x 3/8"	---

WARNING: This product can expose you to chemicals, including lead, which are known to the State of California to cause cancer and birth defects or other reproductive harm. For more information, visit www.P65Warnings.ca.gov

POL FITTINGS
PLUMBING

TEE CONNECTION

2000

PART #	PIPE SIZE	LIST PRICE
34001	1/4" Inverted flare x 1/4" MPT	---

41-1-390-0014 2000

TAILPIECE WITH FLATS

2001A

1/4 NPT

PART #	DESCRIPTION	LIST PRICE
34011	2.34 w/ wrench Flats	---
34012	2.13 w/ Hex	---

1001AUL 21605 M-2001-A 2002A 2001AHN

STANDARD NUT

7/8" Hex

2001B

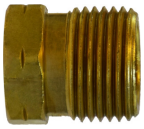

PART #	PIPE SIZE	LIST PRICE
34016	.880-14 LH	---

2001B

TAILPIECE & NUT ASSEMBLY

2002AB

PART #	PIPE SIZE	LIST PRICE
34022	1/4	---

2002AB

POL CAP

2004

PART #	PIPE SIZE	LIST PRICE
34031	.880-14LH	---

ME1699 POL2004 1004A M-2004

POL PLUG WITH CHAIN

2014

PART #	DESCRIPTION	LIST PRICE
34141	POL PLUG WITH CHAIN	---

ME1691-1

SINGLE PIECE POL ADAPTER

2008

PART #	DESCRIPTION	LIST PRICE
34130	MALE POL X 1/4 FPT	---
34131	MALE POL X 1/2 FPT	---

ME351 ME357

ADAPTERS

35792
35810

PART #	PIPE SIZE	LIST PRICE
34041	3/8 Flare x .880-14LH	---
34046	1/2 Flare x .880-14LH	---
34051	5/8 Flare x .880-14LH	---

ME3510 2906E 2007

PLUG

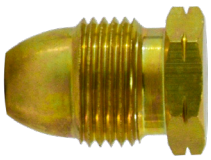

PART #	PIPE SIZE	LIST PRICE
34036		

WARNING: This product can expose you to chemicals, including lead, which are known to the State of California to cause cancer and birth defects or other reproductive harm. For more information, visit www.P65Warnings.ca.gov

MIDLAND INDUSTRIES

THE BUILT TO SERVE ADVANTAGE

As a new family of companies working together we're building the most powerful platform our industry has ever seen.

Founded upon a legacy of customer service, our mission is to give you a distinct competitive advantage. As a leader in globally sourced and domestically manufactured products we're providing needed innovations to distributor supply chains with a variety of marketing and data driven initiatives.

Save time and money with the industry knowledge that comes from decades of experience and hard work. Building advantage means you gain access to our growing network of distribution centers across North America. Come see what the Midland Advantage can do for your business.

THE PERFECT FIT

For decades the Midland family has been the chosen manufacturer and supplier of fittings, valves, hose and accessories to distributors across North America. Today's Midland Industries and our family of companies are committed to helping our customer serve their customers better Experience simple, worry-free products and innovations that make doing business easier.

Midland Metal — A MIDLAND INDUSTRIES COMPANY

Anderson Metals — A MIDLAND INDUSTRIES COMPANY

STAINLESS ADAPTERS INC. — A MIDLAND INDUSTRIES COMPANY

CHAMPION BRASS — FITTINGS • CONNECTORS • VALVES — A MIDLAND INDUSTRIES COMPANY

MID-AMERICA FITTINGS, LLC. — A MIDLAND INDUSTRIES COMPANY

BUCHANAN RUBBER LTD — A MIDLAND INDUSTRIES COMPANY

AMIFLEX INC. — A MIDLAND INDUSTRIES COMPANY

CENTURY BRASS PLUMBING — A MIDLAND INDUSTRIES COMPANY

www.MidlandIndustries.com | 800-821-5725

Connect with us

MIDLAND INDUSTRIES DISTRIBUTION

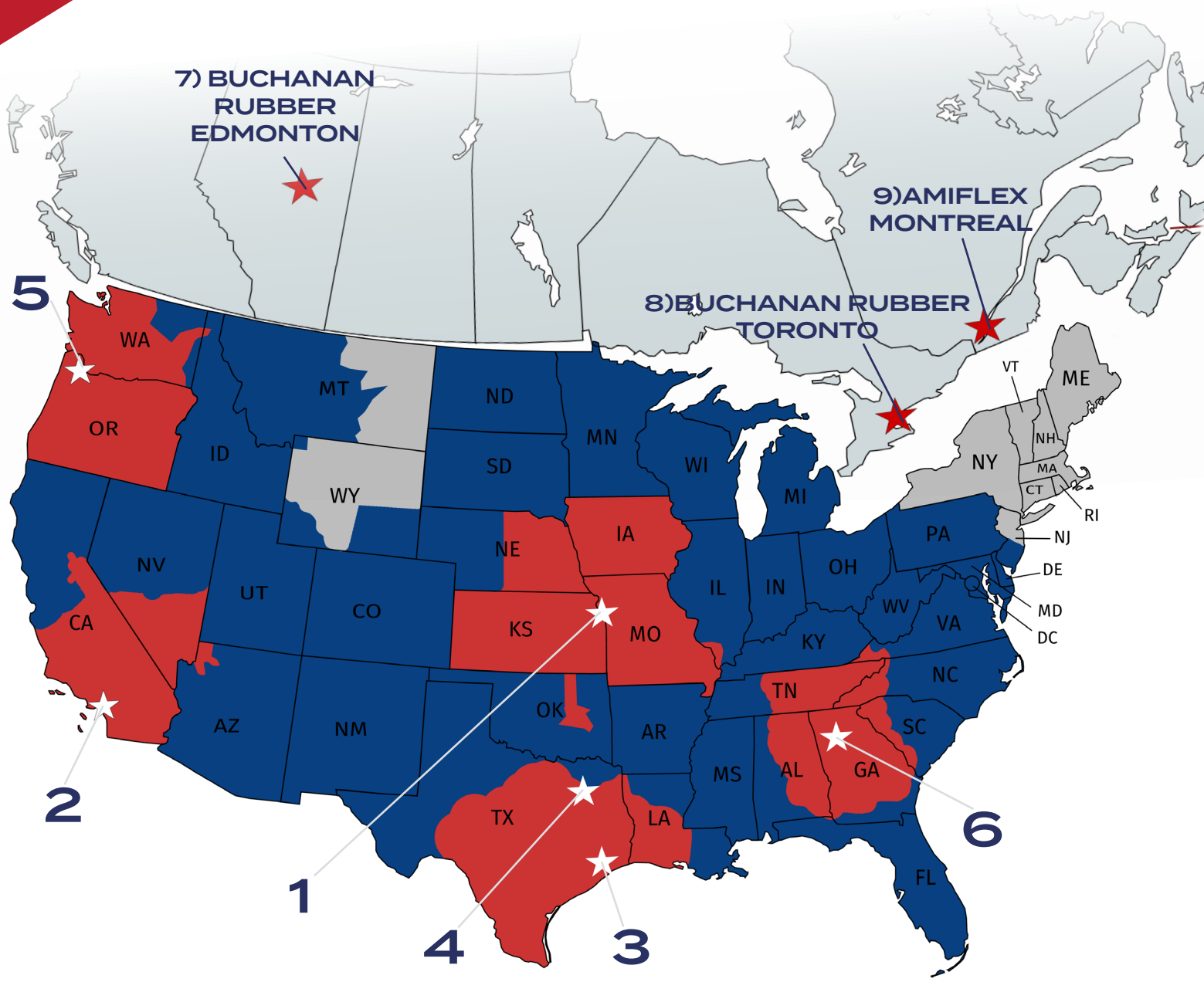

UPS GROUND TIME IN TRANSIT

- NEXT DAY DELIVERY
- 3 DAY DELIVERY
- 2 DAY DELIVERY

*2 Day Delievery is determined by warehouse location and inventory at specified location.

* For detailed UPS Ground time in transit maps please visit **www.UPS.com/maps**

DISTRIBUTION LOCATIONS

1) MIDWEST DISTRIBUTION
Full Stocking Location
3145 Oak Street
Kansas Ciy, MO 64111

2) WEST COAST DISTRIBUTION
Full Stocking Location
659 E Ball Rd
Anahiem, CA 92805

3) TEXAS DISTRIBUTION
Full Stocking Location
5731 Harvey Wilson Dr
Houston, TX 77020

4) TEXAS DISTRIBUTION
Full Stocking Location
600 E. Centre Park
DeSoto, TX 75115

5) PACIFIC NORTH WEST DISTRIBUTION
Full Stocking Location
14015 NE Airport Way
Portland, OR 97230

6) EAST COAST DISTRIBUTION
Full Stocking Location
4221 Cantrell Rd NW
Acworth, GA 30101

MIDLAND INDUSTRIES CUSTOMER SERVICE
Phone: 800-821-5725 || Fax: 800-877-5391 || Email: Sales@MidlandIndustries.com

You can easily check stock and availability for products at these locations online using Account Manager. All accounting will be handled in Kansas City.

CANADIAN DISTRIBUTION

7) BUCHANAN RUBBER-EDMONTON
9547-12 Ave SW,
Edmonton, AB T6X-0C3
Phone: 1-888-775-4673
Fax: 1-888-990-4673
Sales@BuchananRubber.com

8) BUCHANAN RUBBER-TORONTO
50 Fasken Drive
(units 11-21),
Etobicoke, ON M9W-1K5
Phone: 1-888-775-4673
Fax: 1-888-990-4673
Sales@BuchananRubber.com

9) AMIFLEX-MONTREAL
9555 Henri Bourassa Ouest,
Montreal, QC H4S-1S7
Phone: 1-888-775-4673
Fax: 1-888-990-4673
Sales@BuchananRubber.com

Canadian operations serviced through our Edmonton, Toronto & Montreal distribution centers. For more information call customer service at 1-800-775-HOSE (4673)

MIDLAND INDUSTRIES

A NEW FAMILY OF COMPANIES WORKING TOGETHER

The new Midland Industries is a family of brands recognizable industry wide. With our history of outstanding customer service and innovation, Midland Industries is the perfect fit of customer driven solutions, smart technology and deep product selection - built on strong family values and traditions.

WE OFFER ALL THE RESOURCES

BRASS FITTINGS

VALVES

NIPPLES & FITTINGS

PLASTIC FITTINGS

CLAMPS

TUBING

PNEUMATICS

ACCESSORIES

HYDRAULICS

STAINLESS STEEL HYDRAULIC ADAPTERS

HIGH PRESSURE SPRAYER

HOSE

SCHEDULE A SALES MEETING WITH MIDLAND INDUSTRIES!

SHOP OUR AMAZING BRANDS

Midland Metal — A MIDLAND INDUSTRIES COMPANY

Anderson Metals — A MIDLAND INDUSTRIES COMPANY

STAINLESS ADAPTERS INC. — A MIDLAND INDUSTRIES COMPANY

MID-AMERICA FITTINGS, LLC. — A MIDLAND INDUSTRIES COMPANY

BUCHANAN RUBBER LTD — A MIDLAND INDUSTRIES COMPANY

CHAMPION BRASS FITTINGS • CONNECTORS • VALVES — A MIDLAND INDUSTRIES COMPANY

CENTURY BRASS PLUMBING — A MIDLAND INDUSTRIES COMPANY

For More Info Or To Schedule A Sales Meeting Visit Us At **MidlandIndustries.com**